G1. WIRING DIAGRAM, SINGLE SEAT

(See Attachmenta C and D) Note: See Tab. 202 for Equipment List.

REFERENCE:
Installation Drawing 16NC1T/16NC2T Sheet 19 of 23 Rev. 4 and Sheet 21 of 23 Rev. 4

SEE ATTACHMENT “C” & “D”

G2. PORTER SYSTEM, ELECTRIC INSTALLATION - SINGLE SEAT

(See fig. 215, 215a, 215b, 213c, 215d, 215e) Note: See Tab 202 for Equip. List

FIG. 215: PORTER SYSTEM INSTALLATION, SINGLE SEAT side view

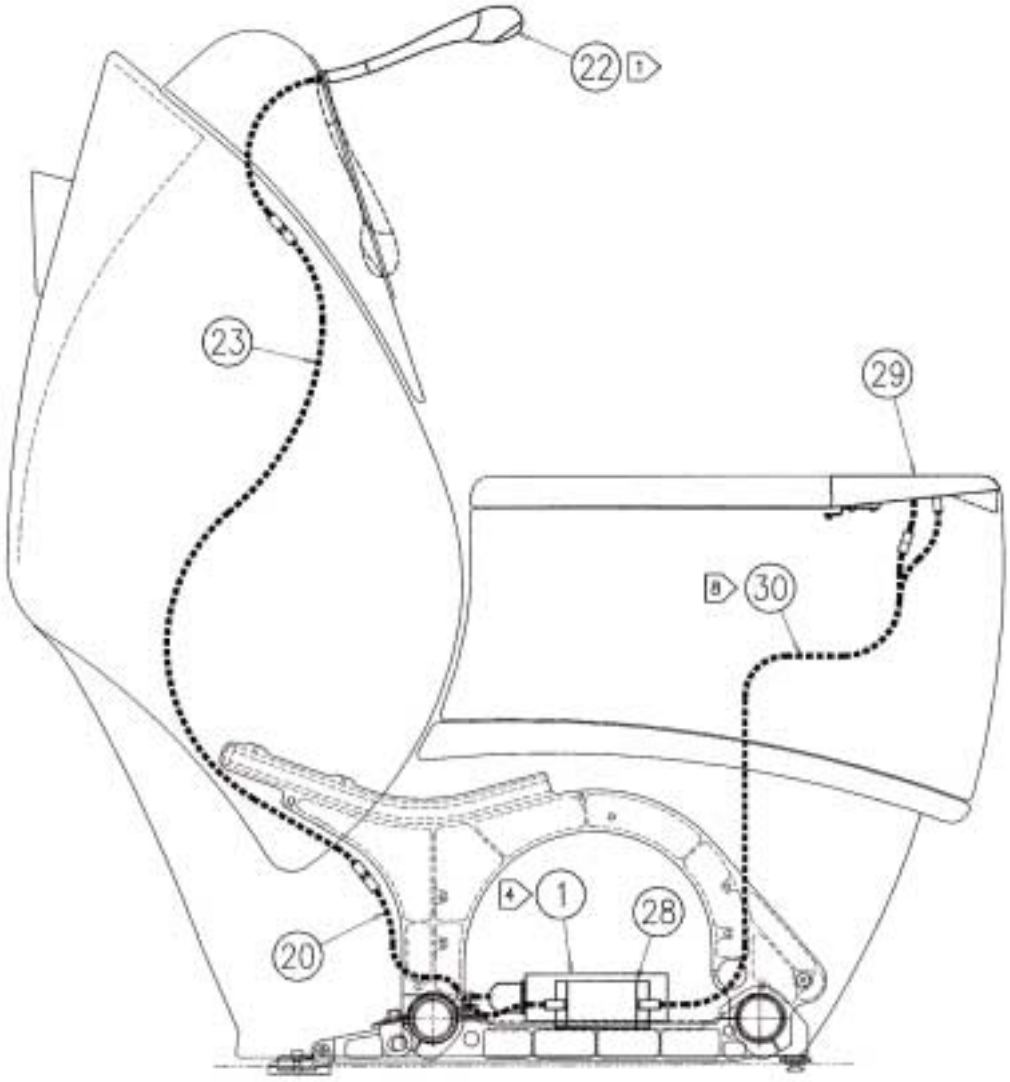

P.L. PORTER SYSTEM
RIGHT ARMREST AISLE SIDE VIEW

REFERENCE: Installation Drawing 16NC1T/16NC2T Sheet 23 of 23 Rev. 3

FIG. 215a: PORTER SYSTEM INSTALLATION, SINGLE SEAT front view

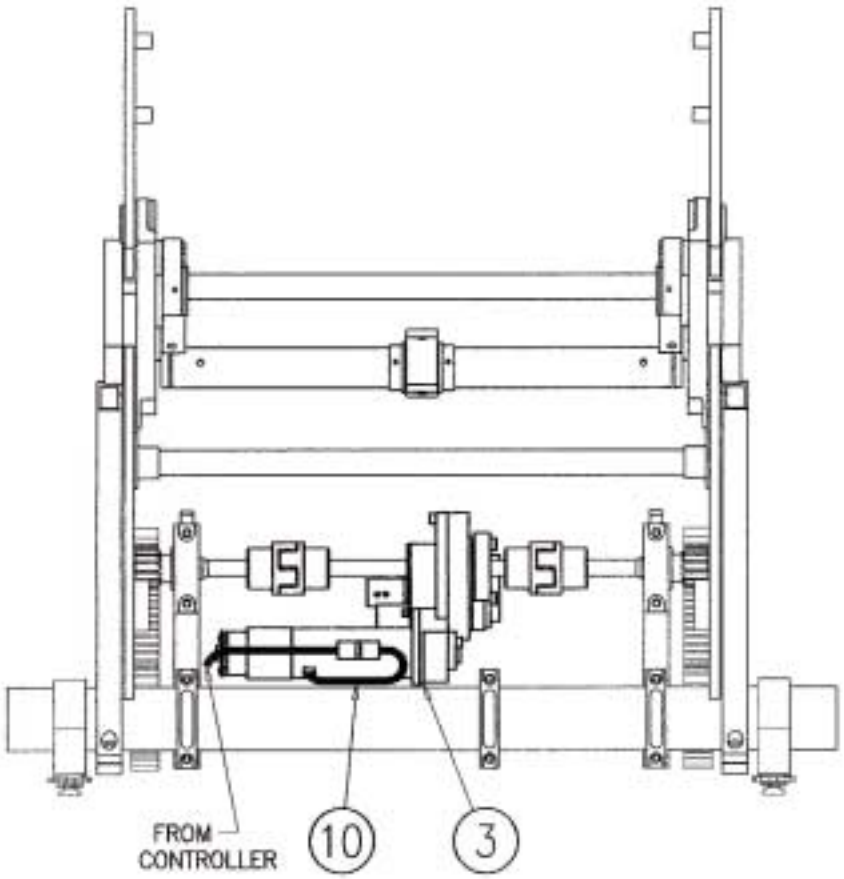

P.L. PORTER SYSTEM

FRONT VIEW (RECLINE ACTUATOR INSTALLATION)

REFERENCE: Installation Drawing 16NC1T/16NC2T Sheet 23 of 23 Rev. 3

FIG. 215b: PORTER SYSTEM INSTALLATION, SINGLE SEAT top view

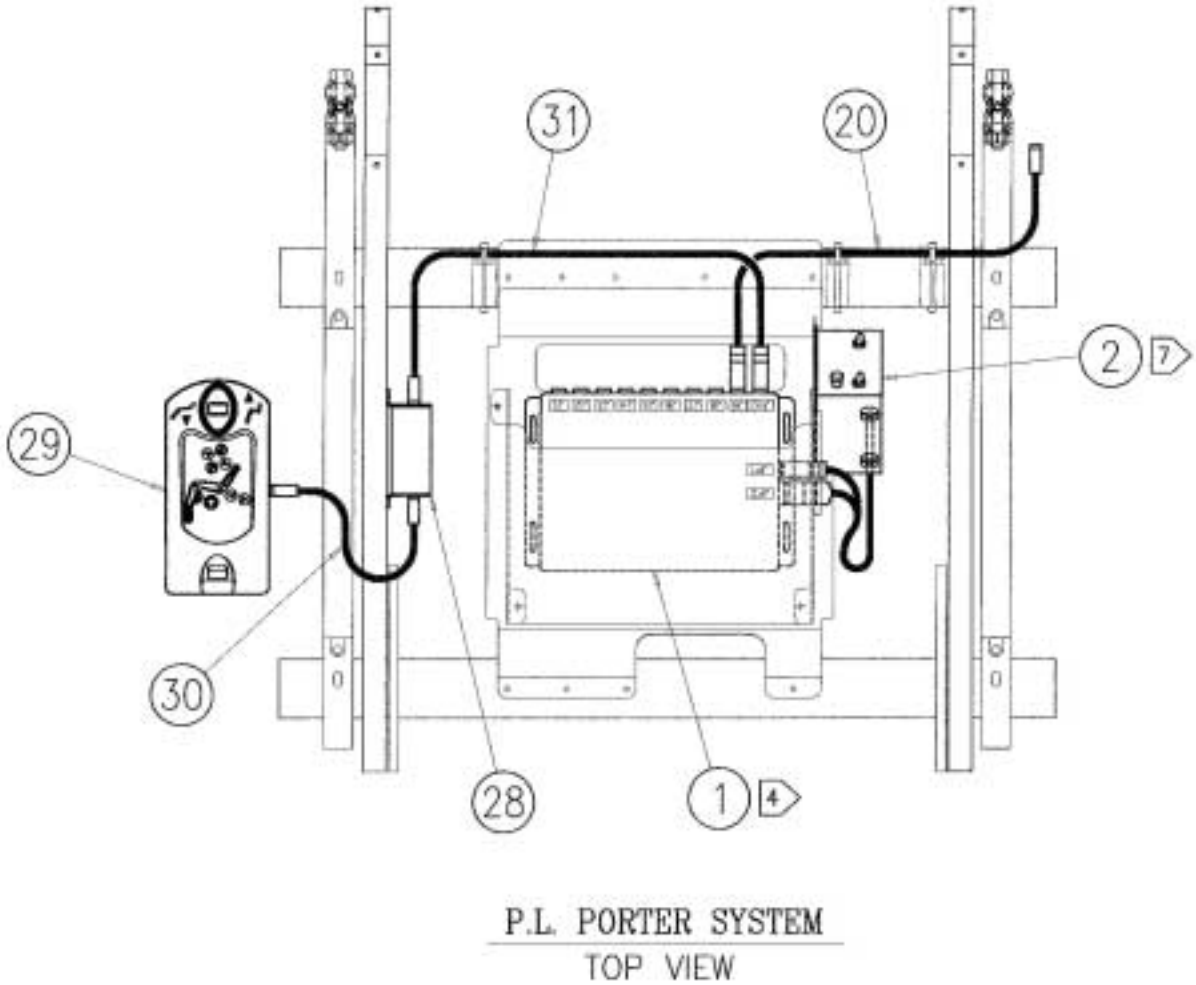

REFERENCE: Installation Drawing 16NC1T/16NC2T Sheet 23 of 23 Rev. 3

FIG. 215c: PORTER SYSTEM INSTALLATION, SINGLE SEAT top view

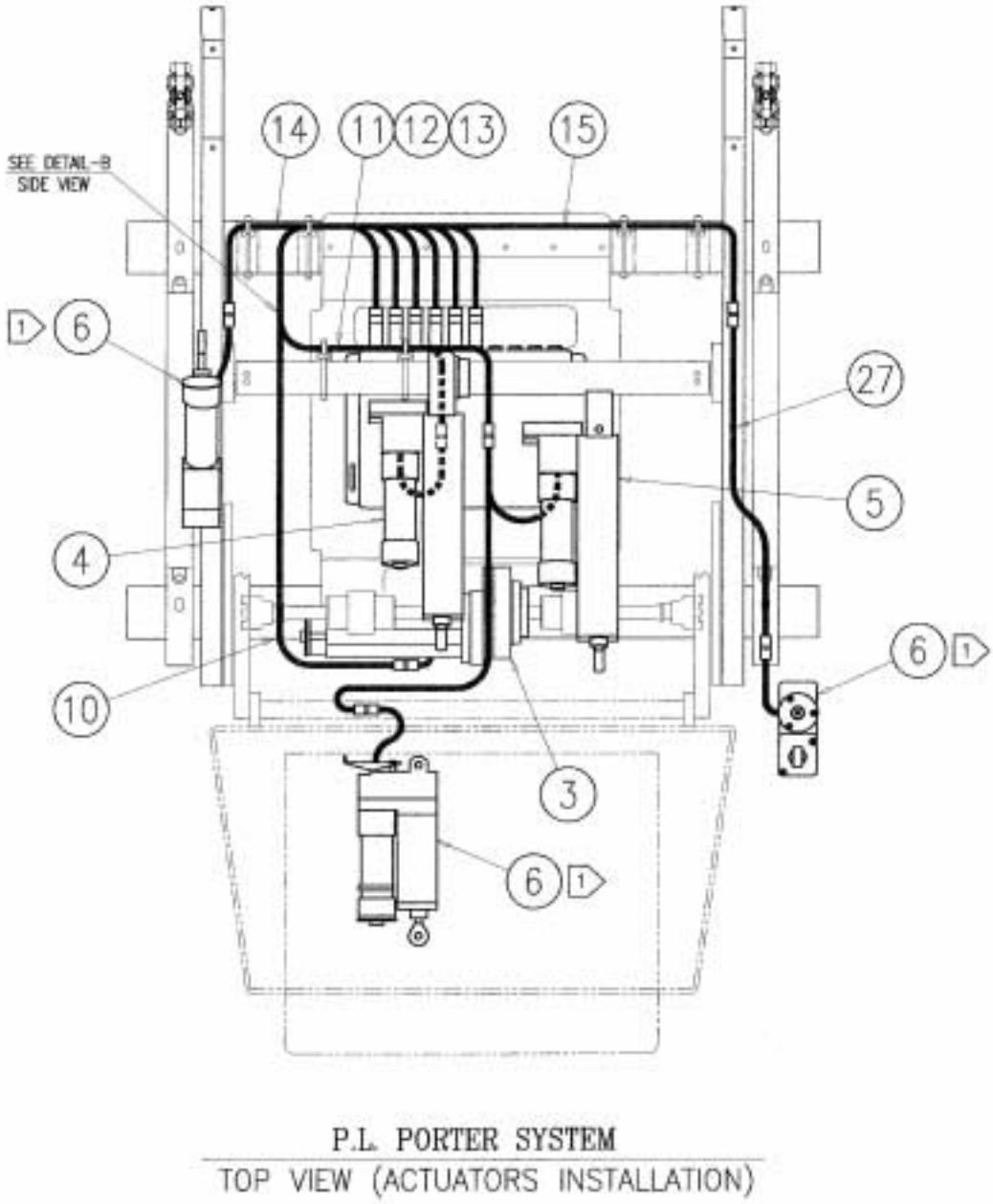

REFERENCE: Installation Drawing 16NC1T/16NC2T Sheet 23 of 23 Rev. 3

FIG. 215d: PORTER SYSTEM INSTALLATION, SINGLE SEAT top view

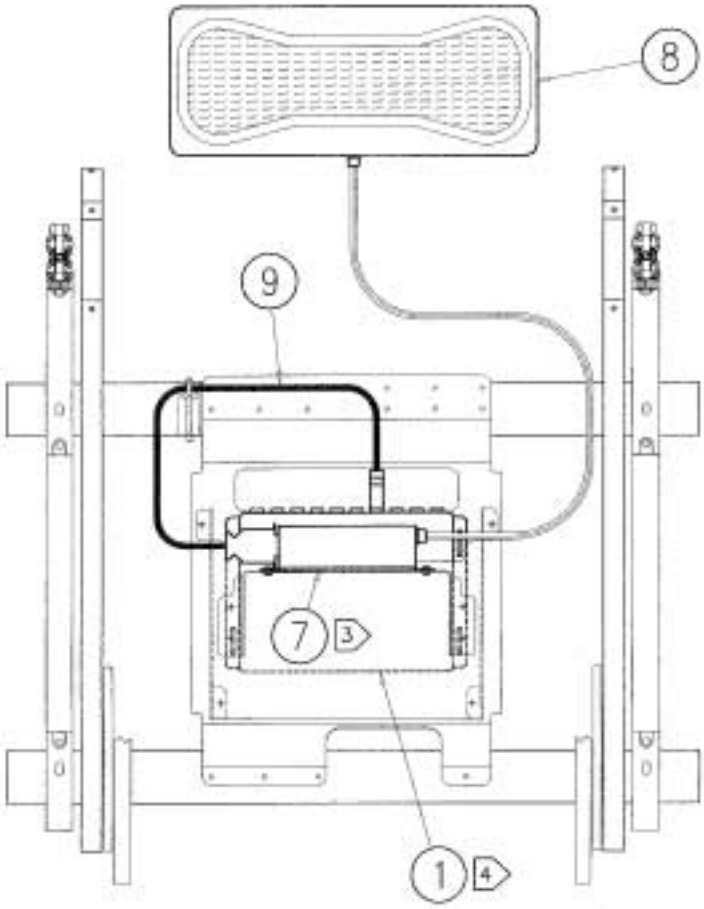

P.L. PORTER SYSTEM
TOP VIEW (LUMBAR SYSTEM INSTALLATION)

REFERENCE: Installation Drawing 16NC1T/16NC2T Sheet 23 of 23 Rev. 3

FIG. 215e: PORTER SYSTEM INSTALLATION, SINGLE SEAT side view

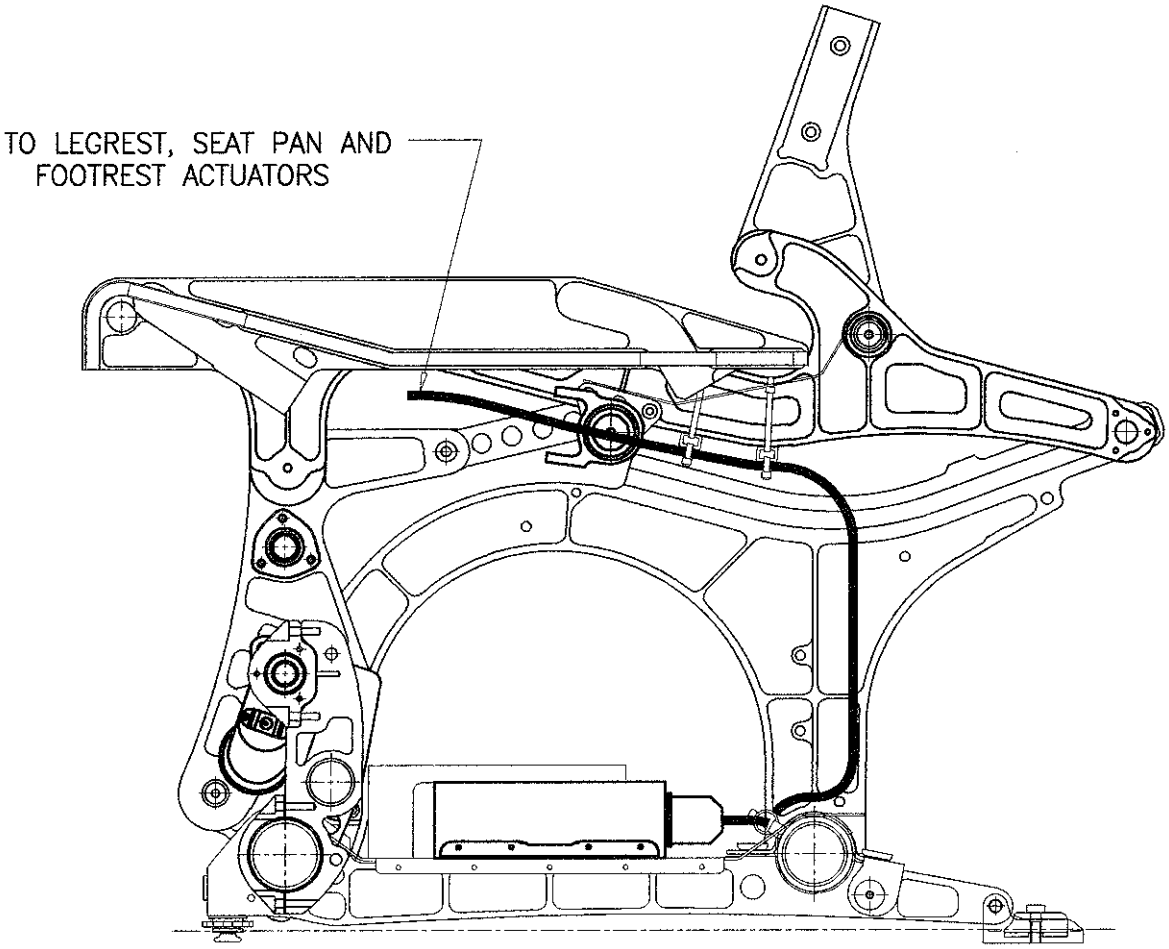

P.L. PORTER SYSTEM

SIDE VIEW (DETAIL–B)

REFERENCE: Installation Drawing 16NC1T/16NC2T Sheet 23 of 23 Rev. 3

G3. MATSUSHITA SYSTEM, ELECTRIC INSTALLATION - SINGLE SEAT

(See fig. 216, 216a) Note: See Tab 202 for Equipment List

FIG. 216: MATSUSHITA SYSTEM INSTALLATION, SINGLE SEAT side view

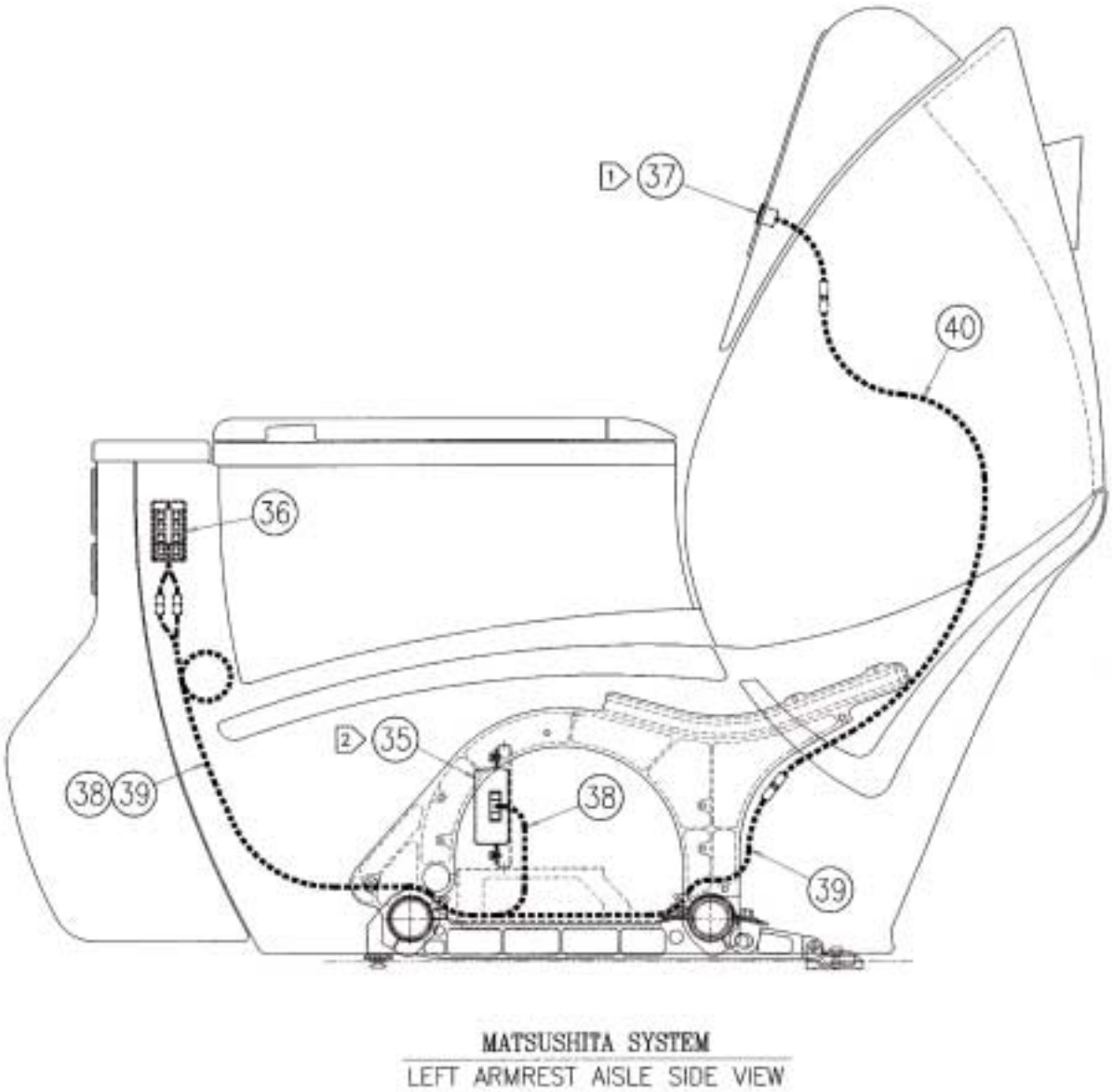

REFERENCE: Installation Drawing 16NC1T/16NC2T Sheet 23 of 23 Rev. 3

FIG. 216a: MATSUSHITA SYSTEM INSTALLATION, SINGLE SEAT top view

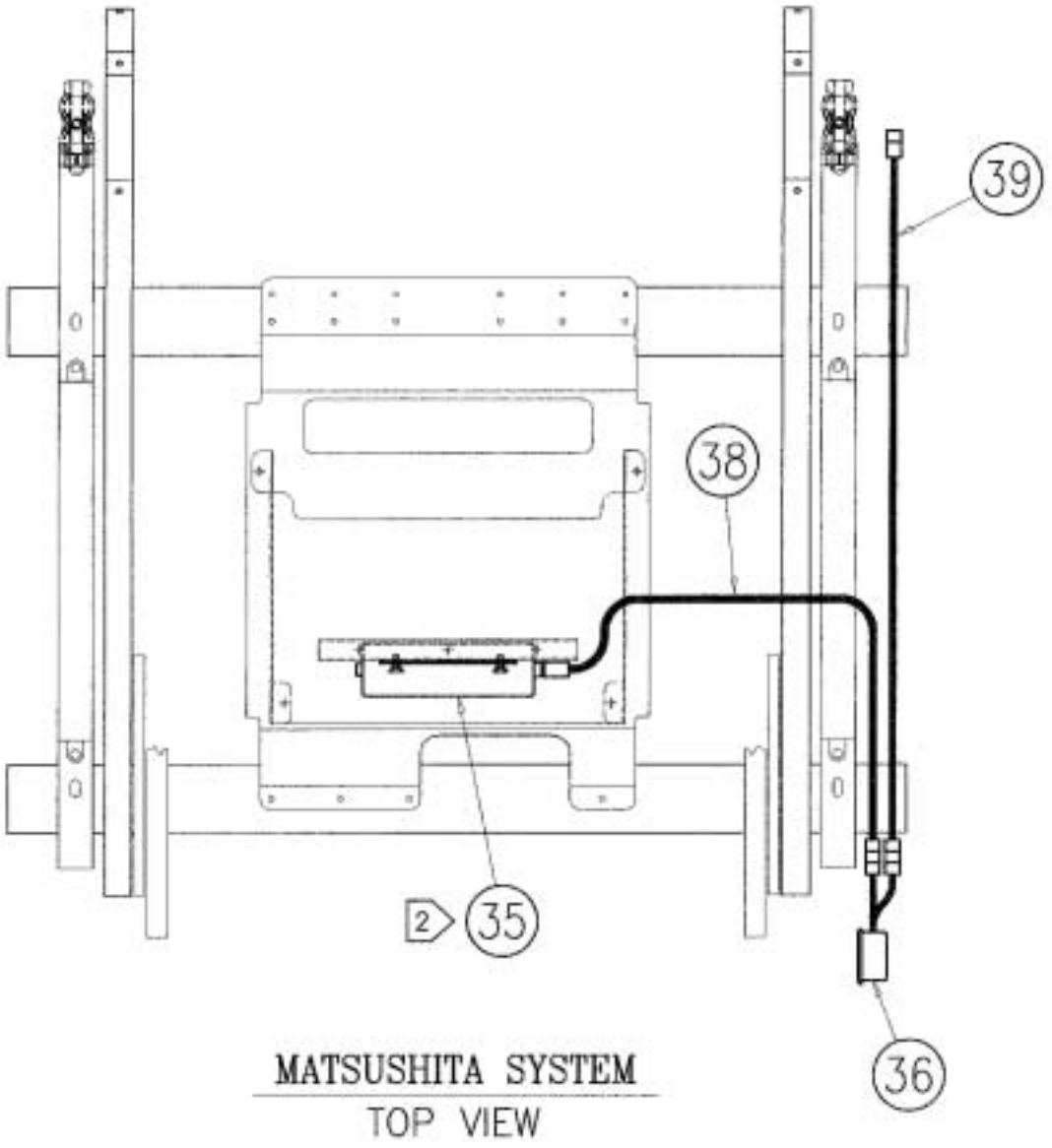

REFERENCE: Installation Drawing 16NC1T/16NC2T Sheet 23 of 23 Rev. 3

G4. GD SYSTEM, ELECTRIC INSTALLATION - SINGLE SEAT

(See fig. 217, 217a) Note: See Tab 202 for Equipment List

FIG. 217: GD SYSTEM INSTALLATION, SINGLE SEAT side view

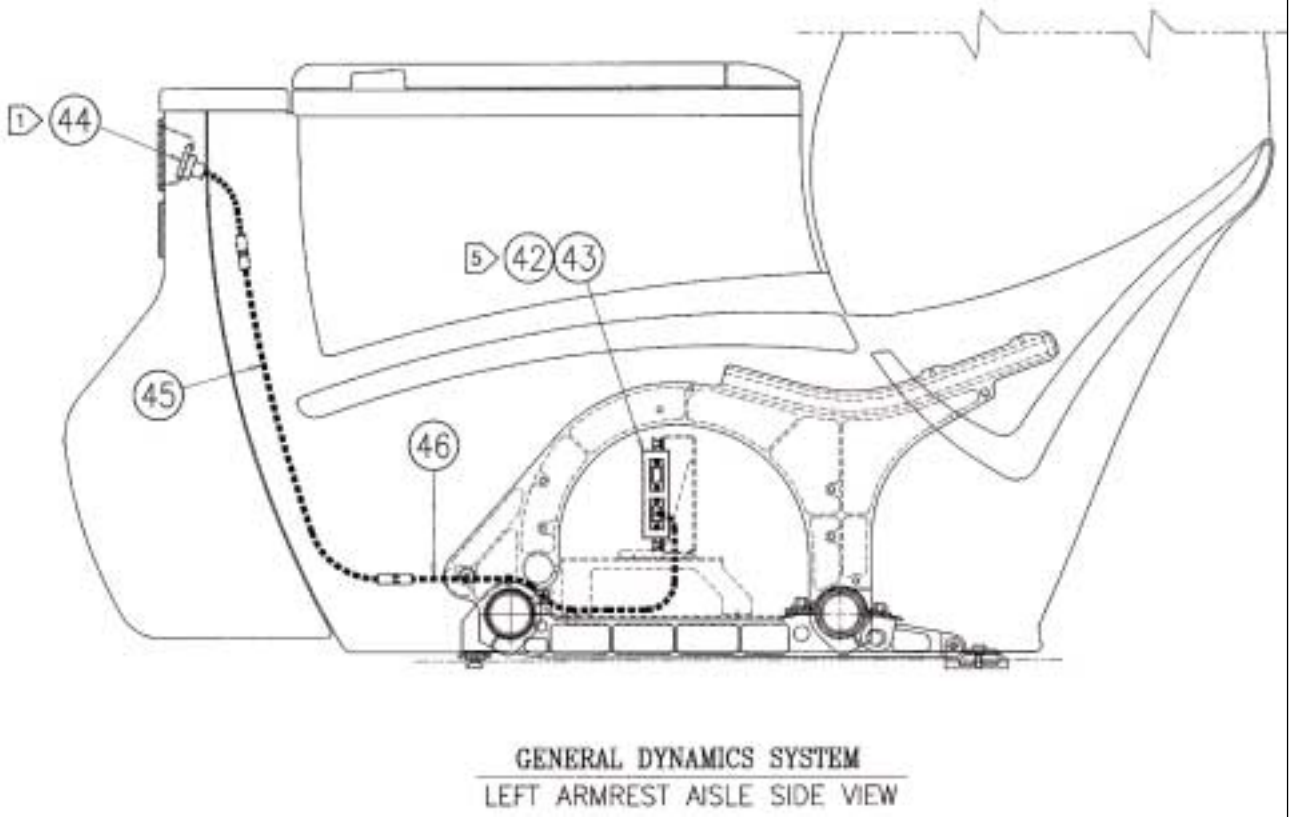

REFERENCE: Installation Drawing 16NC1T/16NC2T Sheet 23 of 23 Rev. 3

FIG. 217a: GD SYSTEM INSTALLATION, SINGLE SEAT top view

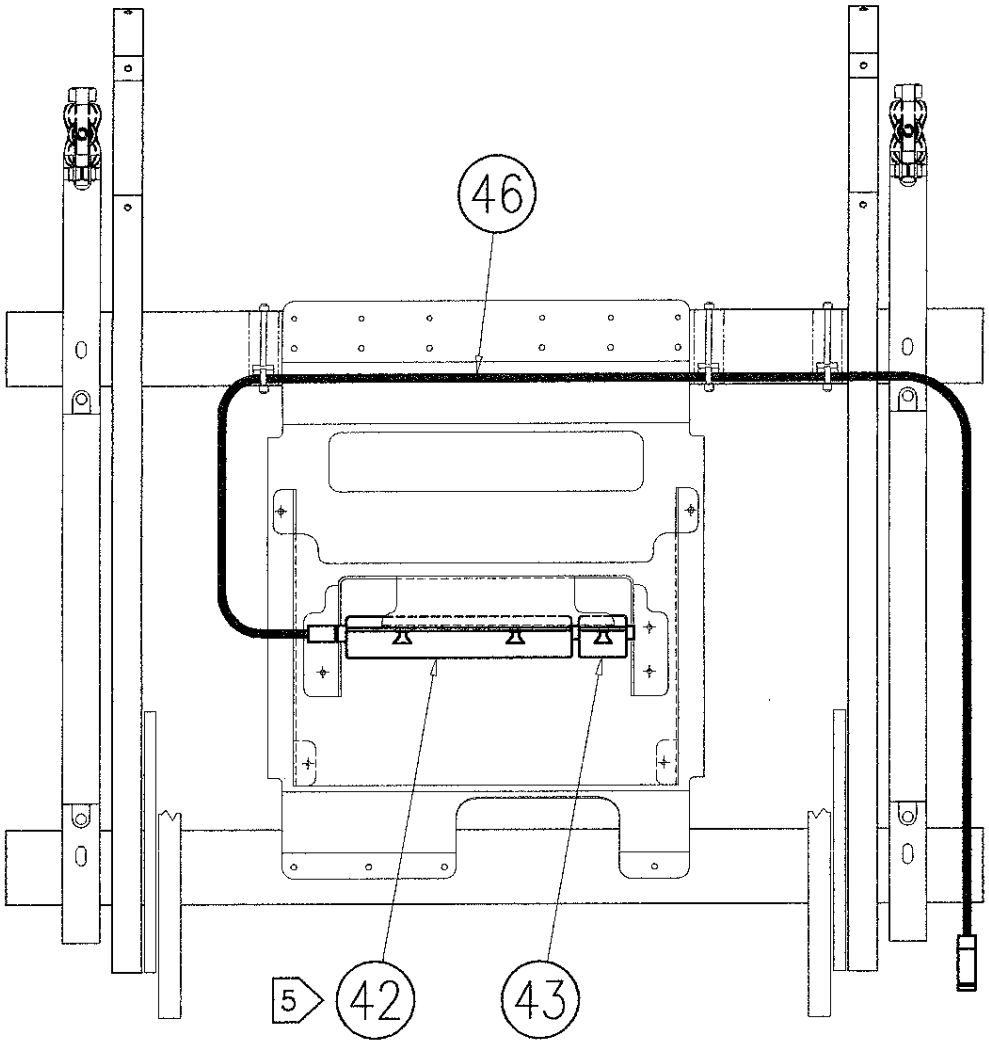

GENERAL DYNAMICS SYSTEM

TOP VIEW

REFERENCE: Installation Drawing 16NC1T/16NC2T Sheet 23 of 23 Rev. 3

G5. GTE SYSTEM, ELECTRIC INSTALLATION - SINGLE SEAT

(See fig. 218, 218a) Note: See Tab 202 for Equipment List

FIG. 218: GTE SYSTEM INSTALLATION, SINGLE SEAT side view

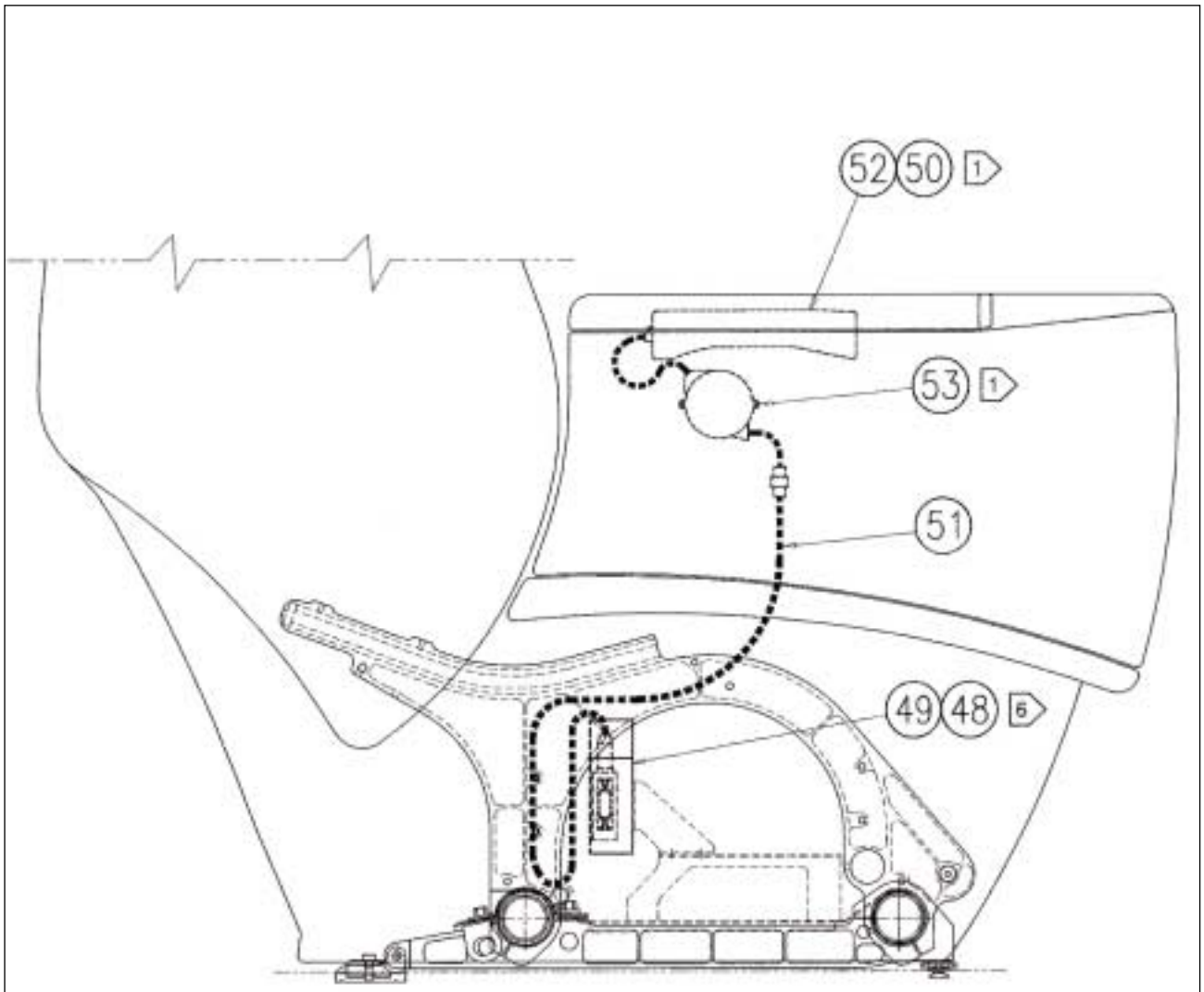

GTE AIRFONE SYSTEM
RIGHT ARMREST AISLE SIDE VIEW

REFERENCE: Installation Drawing 16NC1T/16NC2T Sheet 23 of 23 Rev. 3

FIG. 218a: GTE SYSTEM INSTALLATION, SINGLE SEAT top view

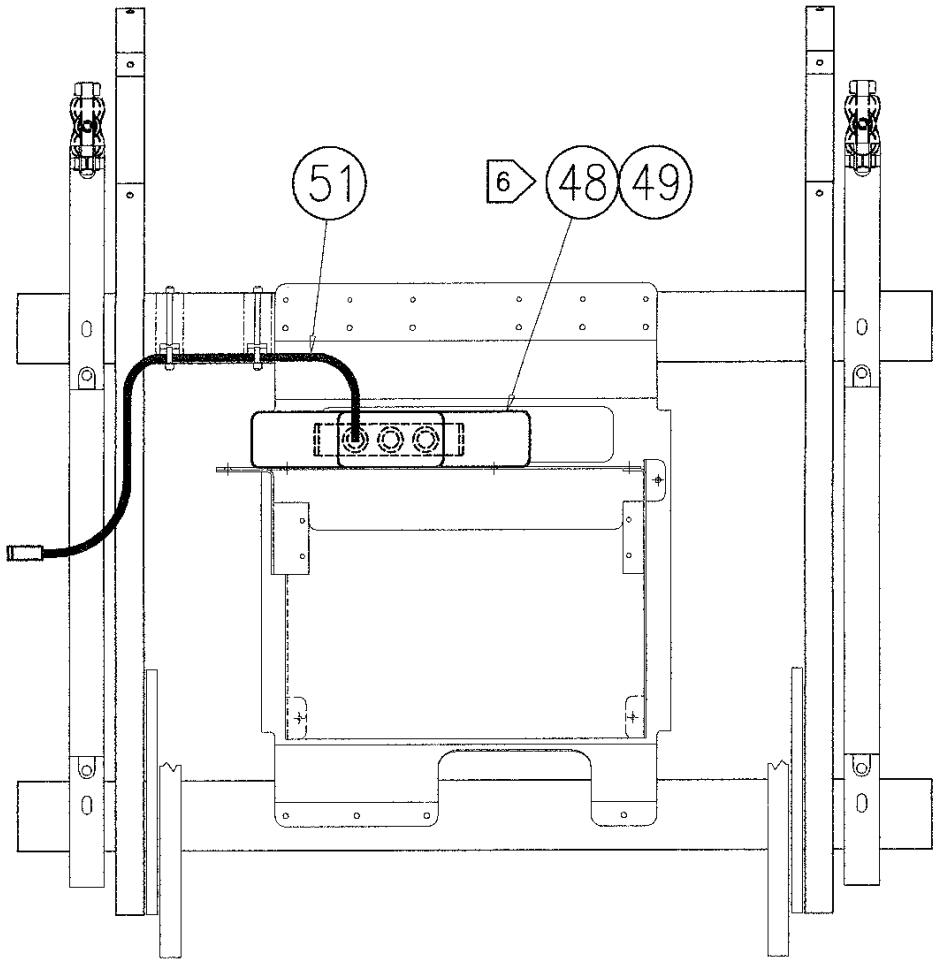

GTE AIRFONE SYSTEM

TOP VIEW

REFERENCE: Installation Drawing 16NC1T/16NC2T Sheet 23 of 23 Rev. 3

G6. BONDING STRAP INSTALLATION - SINGLE SEAT

(See fig. 219) Note: See Tab 202 for Equipment List

FIG. 219: BONDING STRAP INSTALLATION, SINGLE SEAT top view

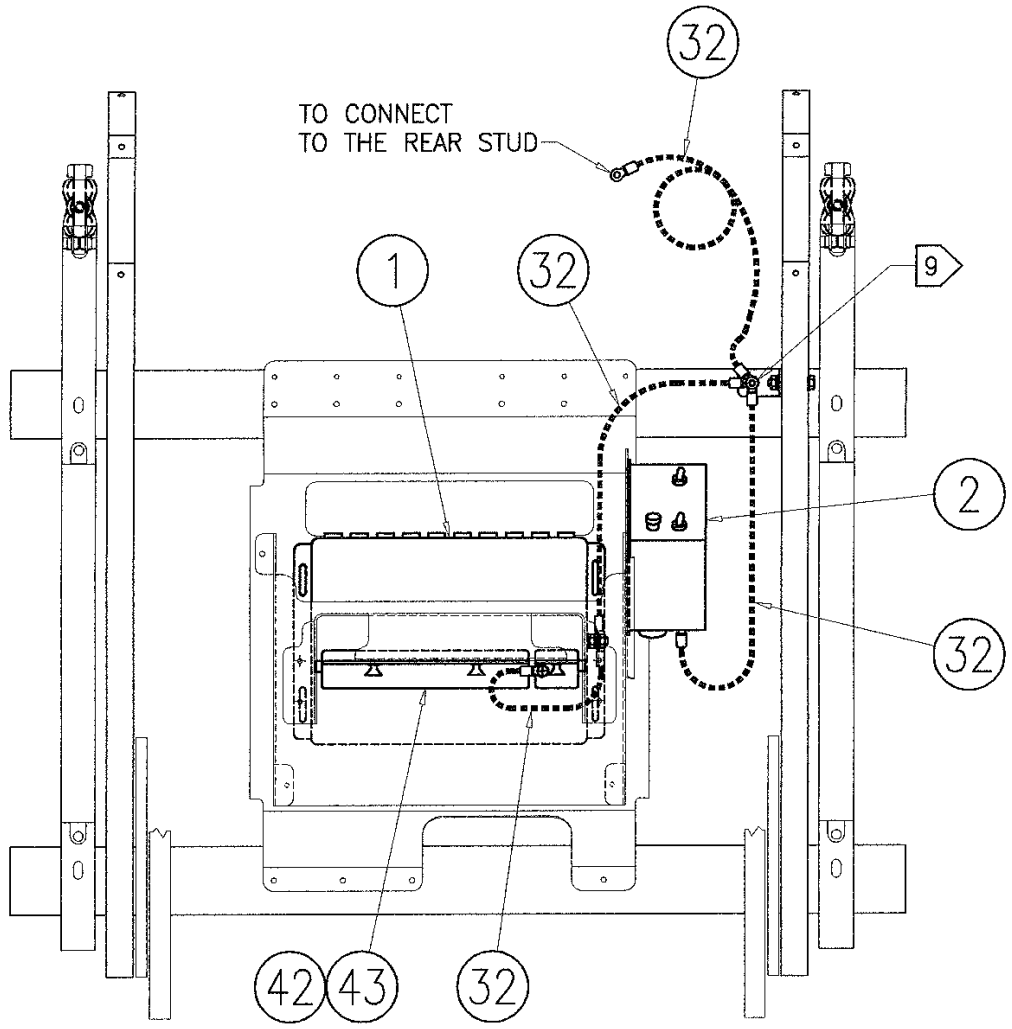

BONDING STRAPS INSTALLATION

TOP VIEW

REFERENCE: Installation Drawing 16NC1T/16NC2T Sheet 23 of 23 Rev. 3

G7. HARNESS ATTACHING POINT - SINGLE SEAT

(See fig. 220) Note: See Tab 202 for Equipment List

FIG. 220: TYPICAL HARNESS ATTACHING POINT, SINGLE SEAT

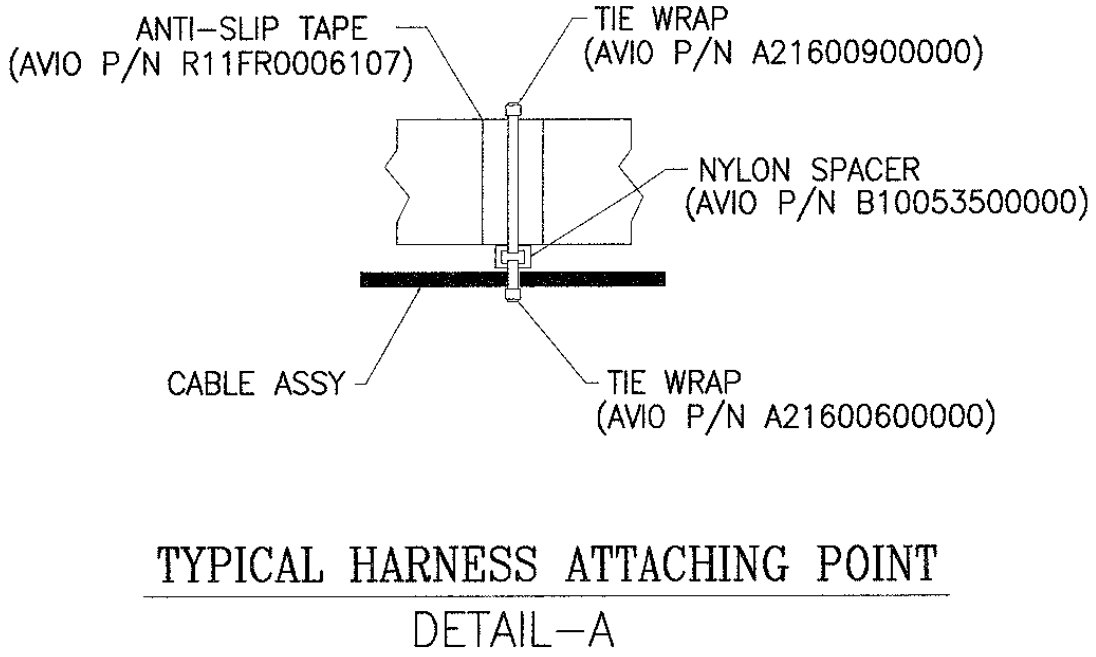

REFERENCE: Installation Drawing 16NC1T/16NC2T Sheet 23 of 23 Rev. 3

G8. SEAT JUNCTION BOX INSTALLATION, SINGLE SEAT

(See fig. 221, 221a, 221b, 221c)

FIG. 221: SJB INSTALLATION, SINGLE SEAT front view

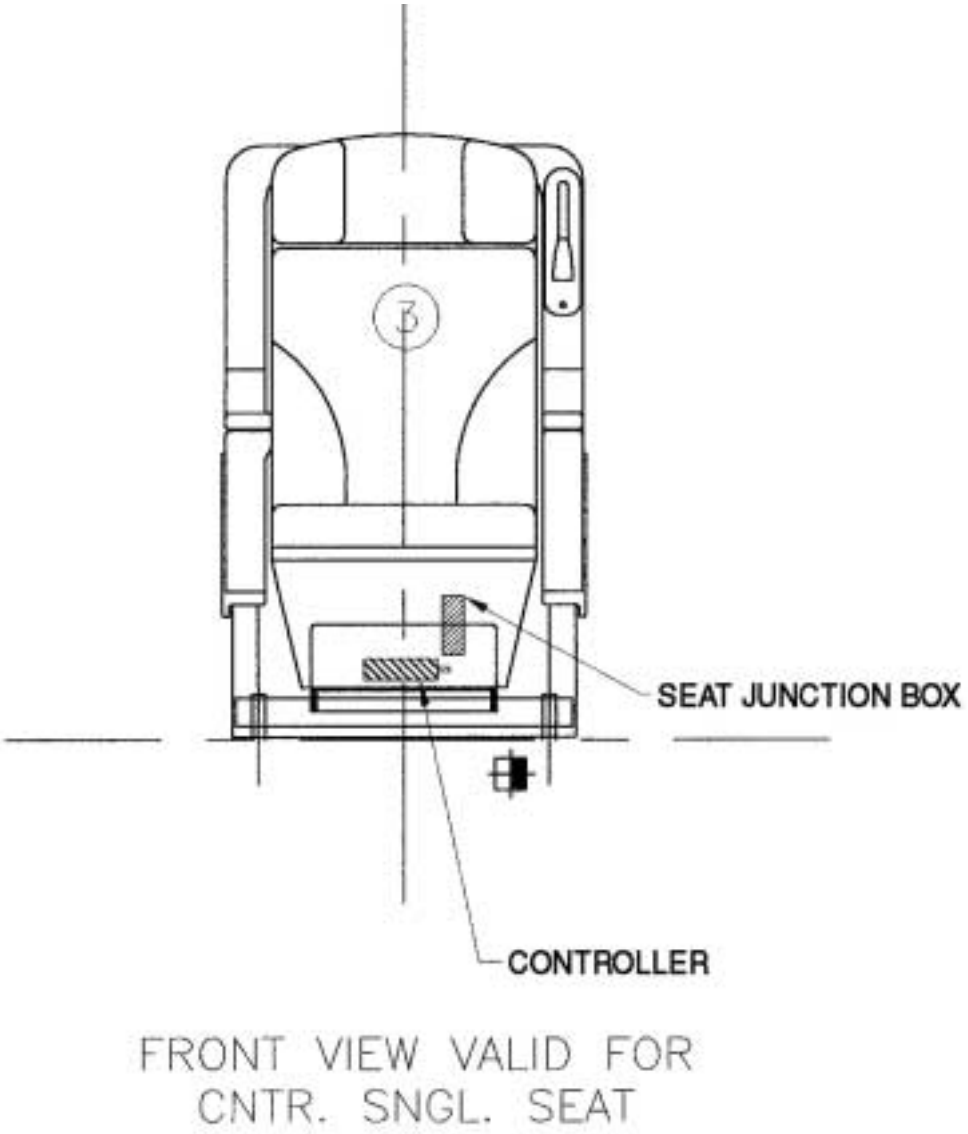

REFERENCE: Installation Drawing 16NC1T/16NC2T Sheet 8 of 23 Rev. 2

FIG. 221a: SJB INSTALLATION, SINGLE SEAT side view

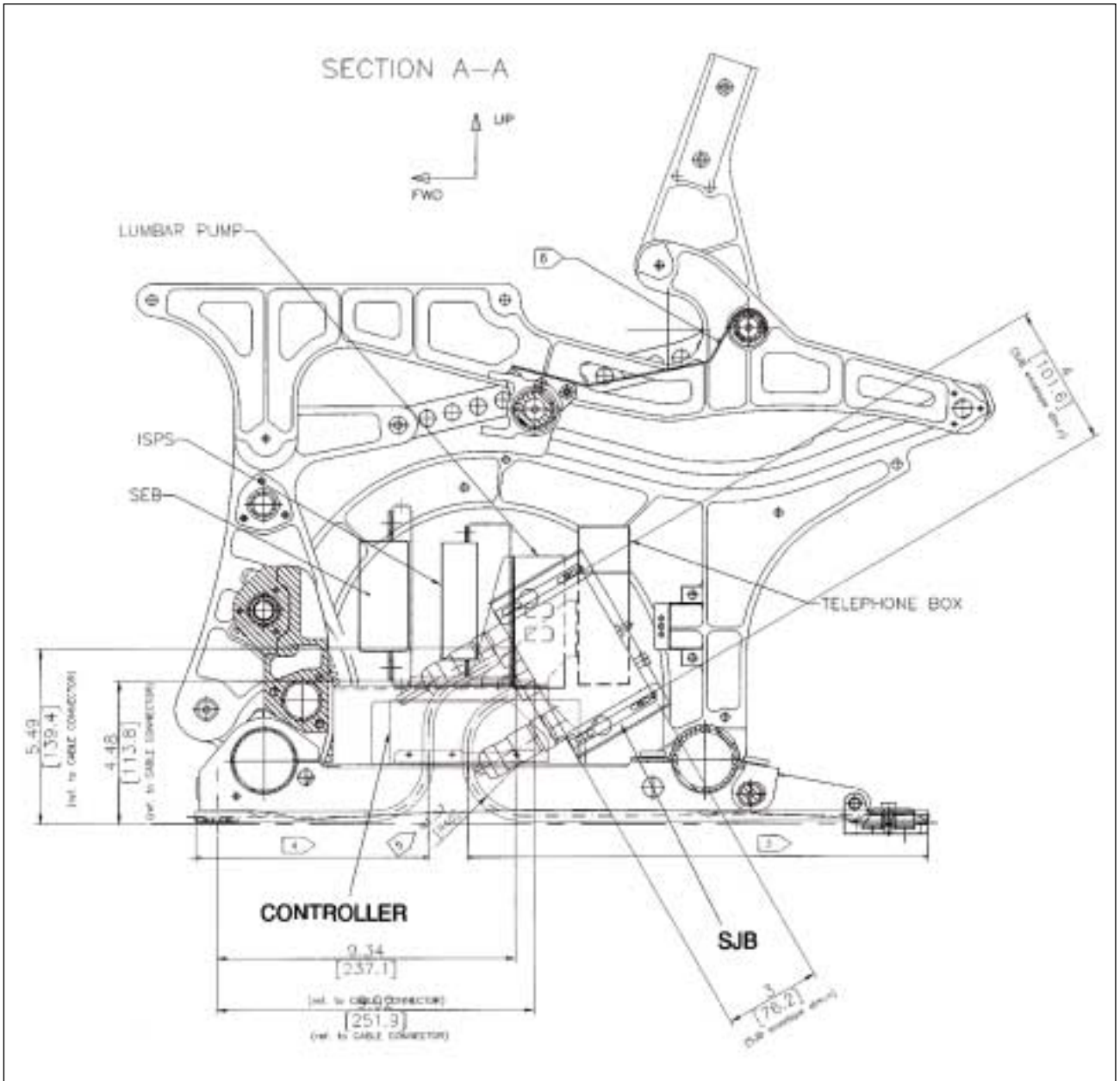

REFERENCE: Installation Drawing 16NC1T/16NC2T Sheet 8 of 23 Rev. 2

FIG. 221b: SJB INSTALLATION, SINGLE SEAT top view

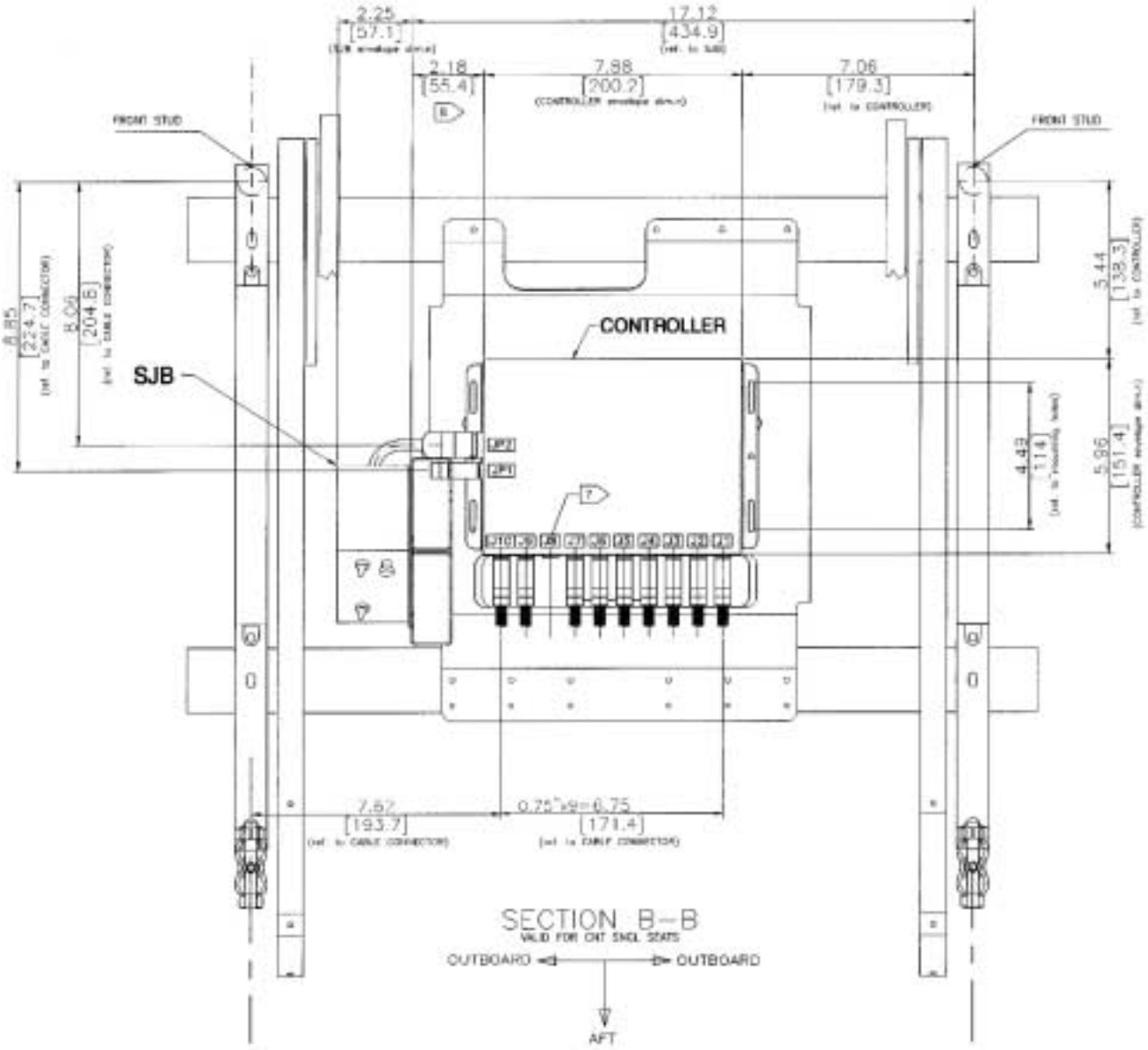

REFERENCE: Installation Drawing 16NC1T/16NC2T Sheet 8 of 23 Rev. 2

FIG. 221c: SJB INSTALLATION, SINGLE SEAT rear view

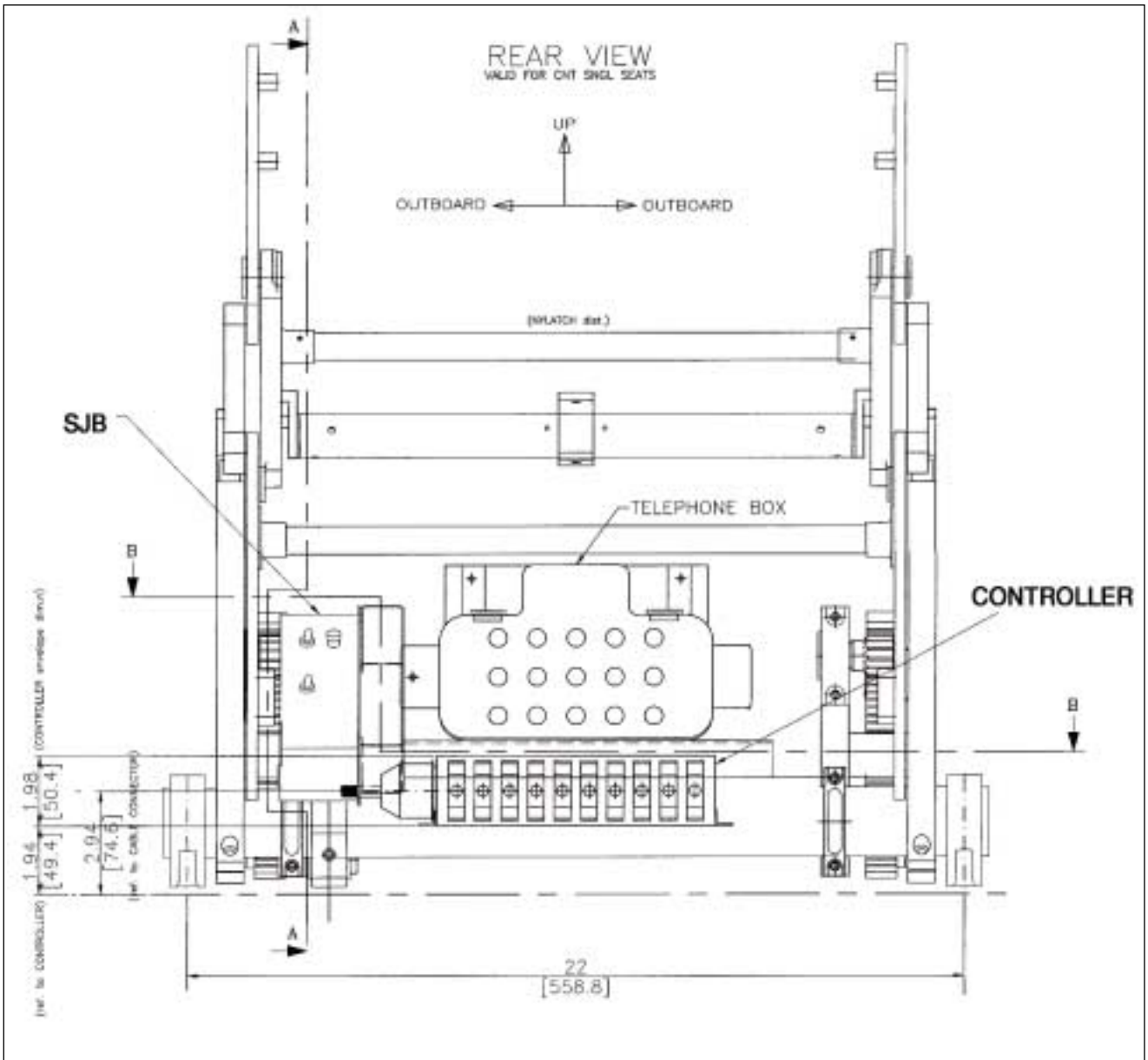

REFERENCE: Installation Drawing 16NC1T/16NC2T Sheet 8 of 23 Rev. 2

G9. SEB INSTALLATION - SINGLE SEAT

(See fig. 222, 222a, 222b, 222c)

FIG. 222: SEB INSTALLATION, SINGLE SEAT front view

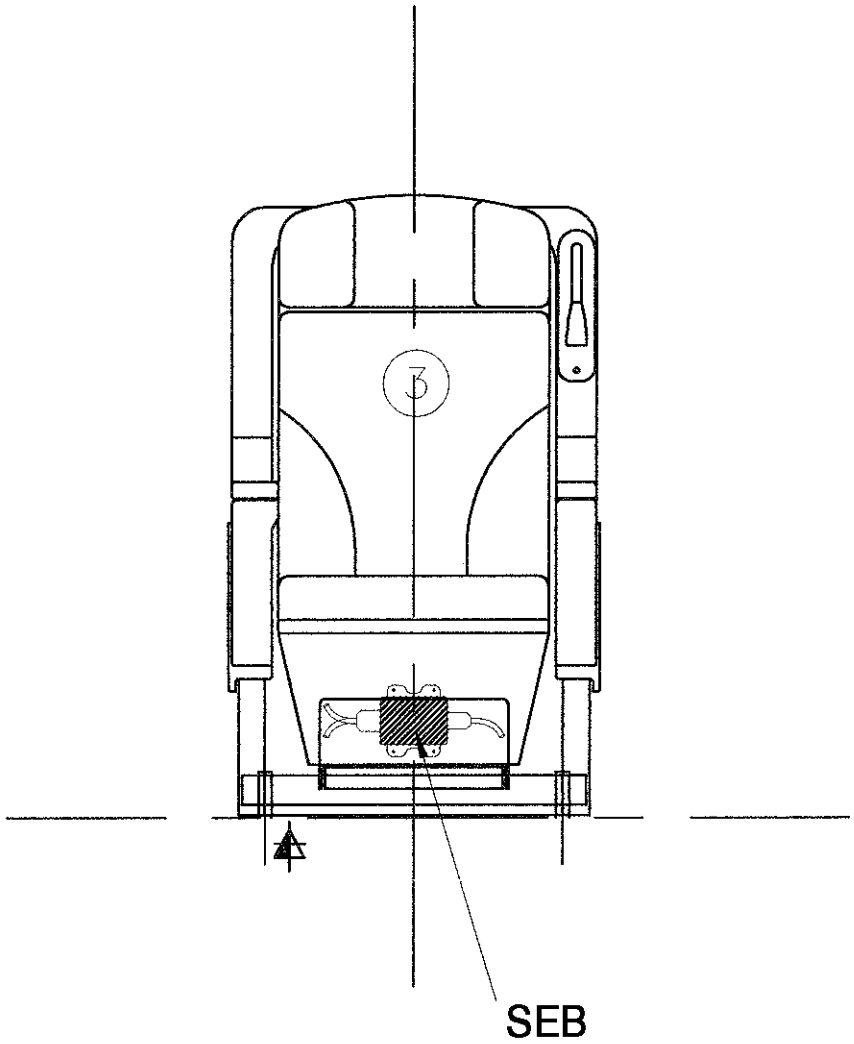

FRONT VIEW VALID FOR
CNTR. SNGL. SEAT

REFERENCE: Installation Drawing 16NC1T/16NC2T Sheet 6 of 23 Rev. 2

FIG. 222a: SEB INSTALLATION, SINGLE SEAT side view

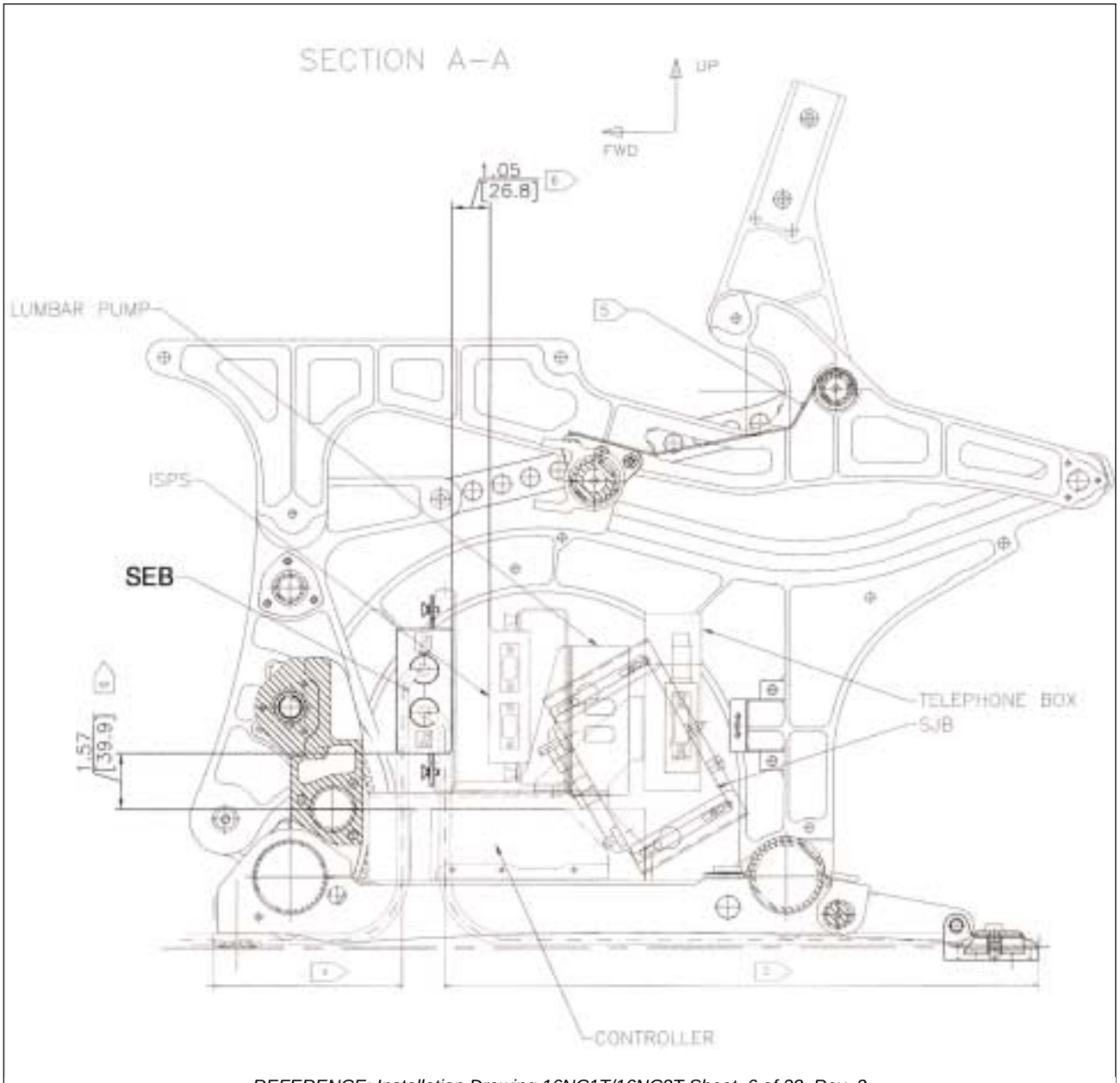

REFERENCE: Installation Drawing 16NC1T/16NC2T Sheet 6 of 23 Rev. 2

FIG. 222b SEB INSTALLATION, SINGLE SEAT top view

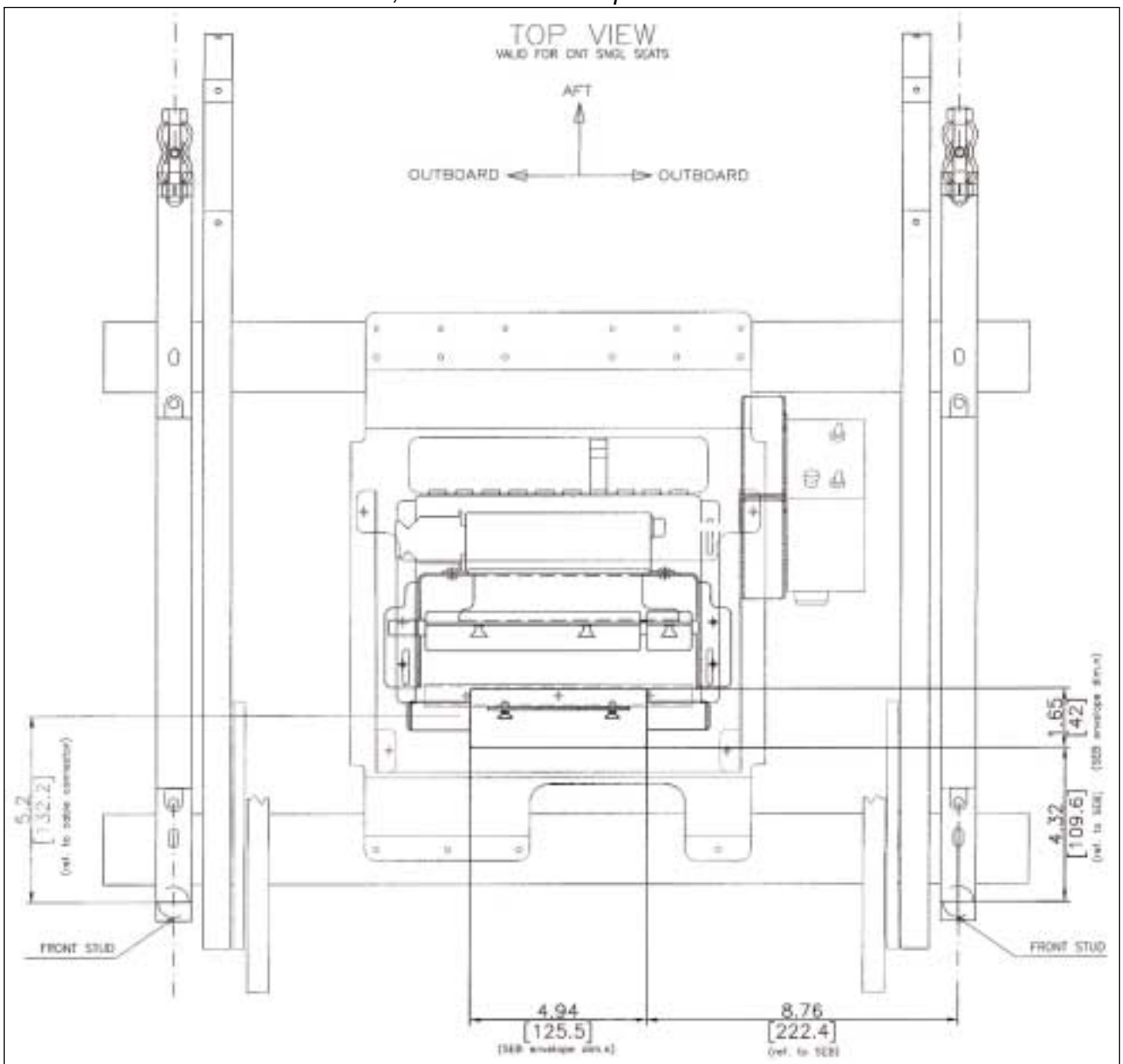

REFERENCE: Installation Drawing 16NC1T/16NC2T Sheet 6 of 23 Rev. 2

FIG. 222c: SEB INSTALLATION, SINGLE SEAT front view

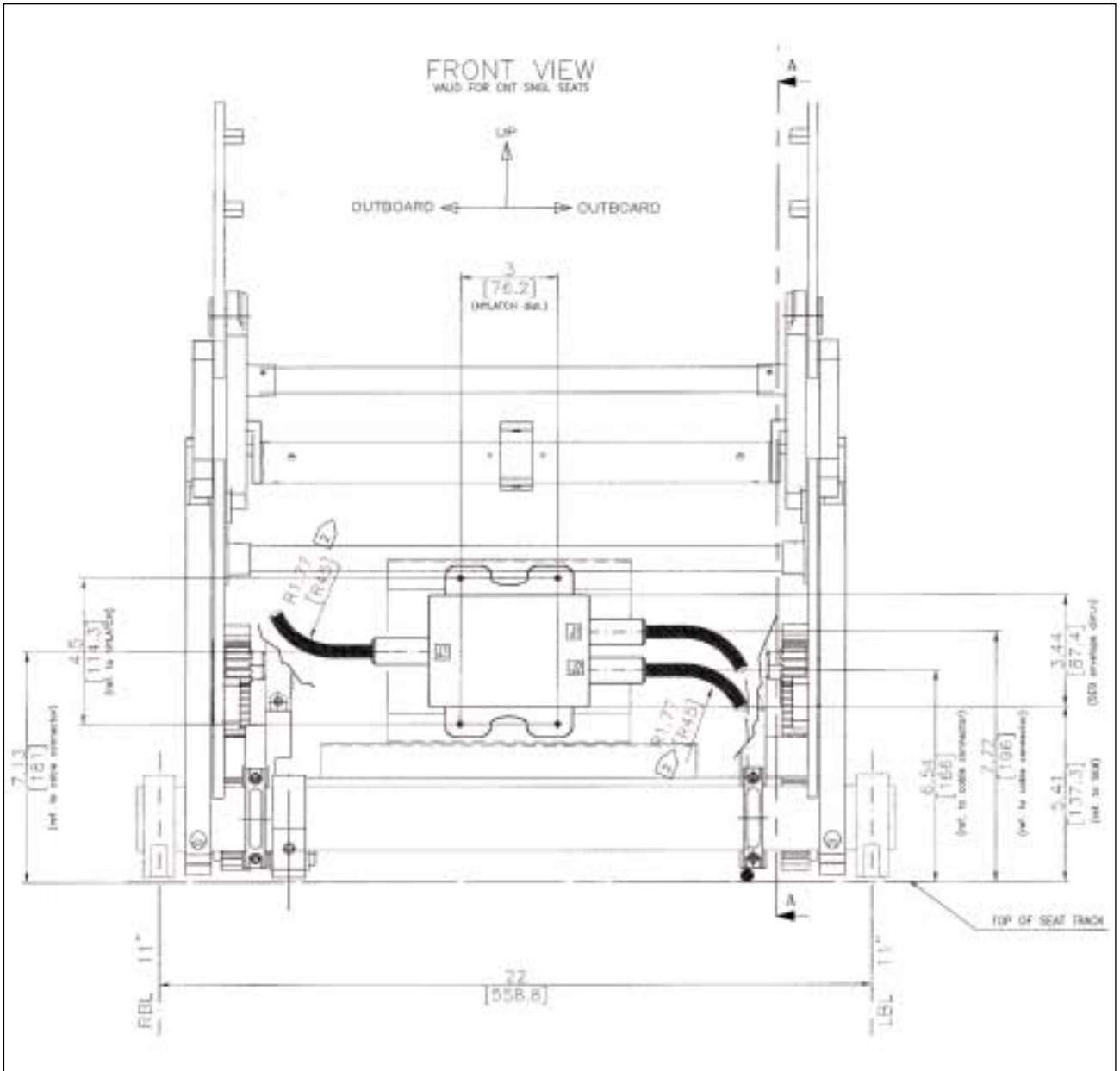

REFERENCE: Installation Drawing 16NC1T/16NC2T Sheet 6 of 23 Rev. 2

G10. CONTROLLER INSTALLATION - SINGLE SEAT

(See fig. 223, 223a, 223b, 223c)

FIG. 223: CONTROLLER INSTALLATION, SINGLE SEAT front view

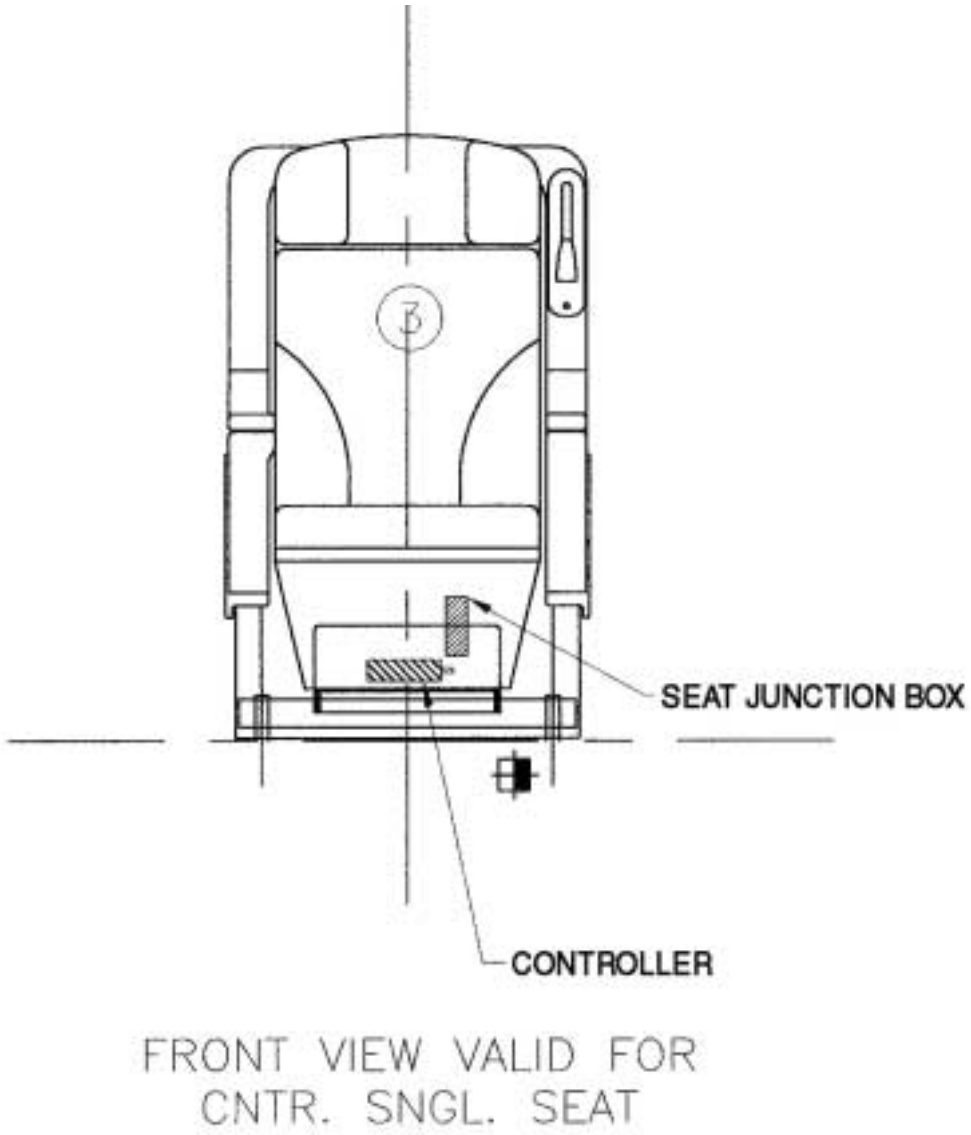

REFERENCE: Installation Drawing 16NC1T/16NC2T Sheet 8 of 23 Rev. 2

FIG. 223a: CONTROLLER INSTALLATION, SINGLE SEAT side view

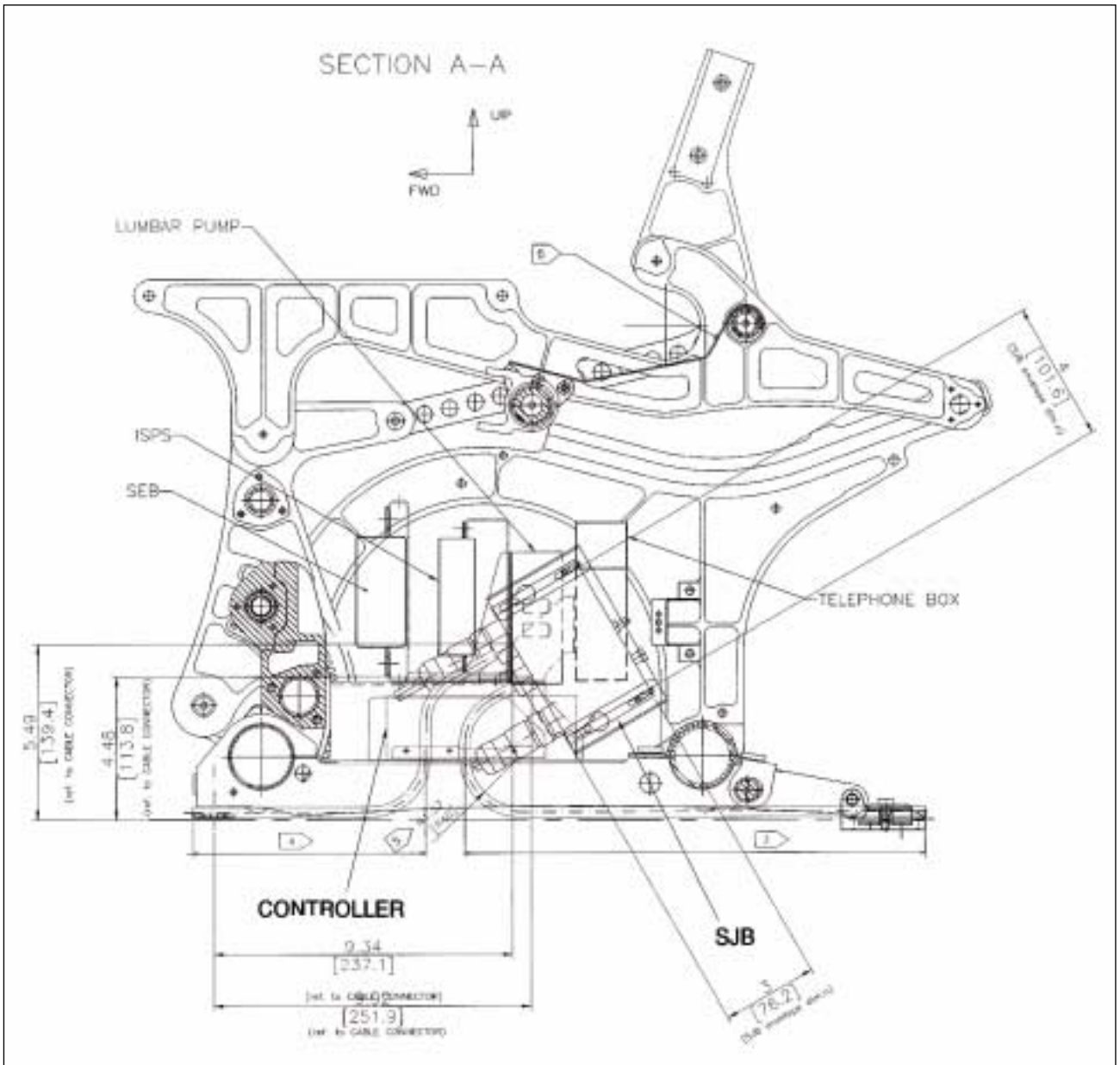

REFERENCE: Installation Drawing 16NC1T/16NC2T Sheet 8 of 23 Rev. 2

FIG. 223b CONTROLLER INSTALLATION, SINGLE SEAT top view

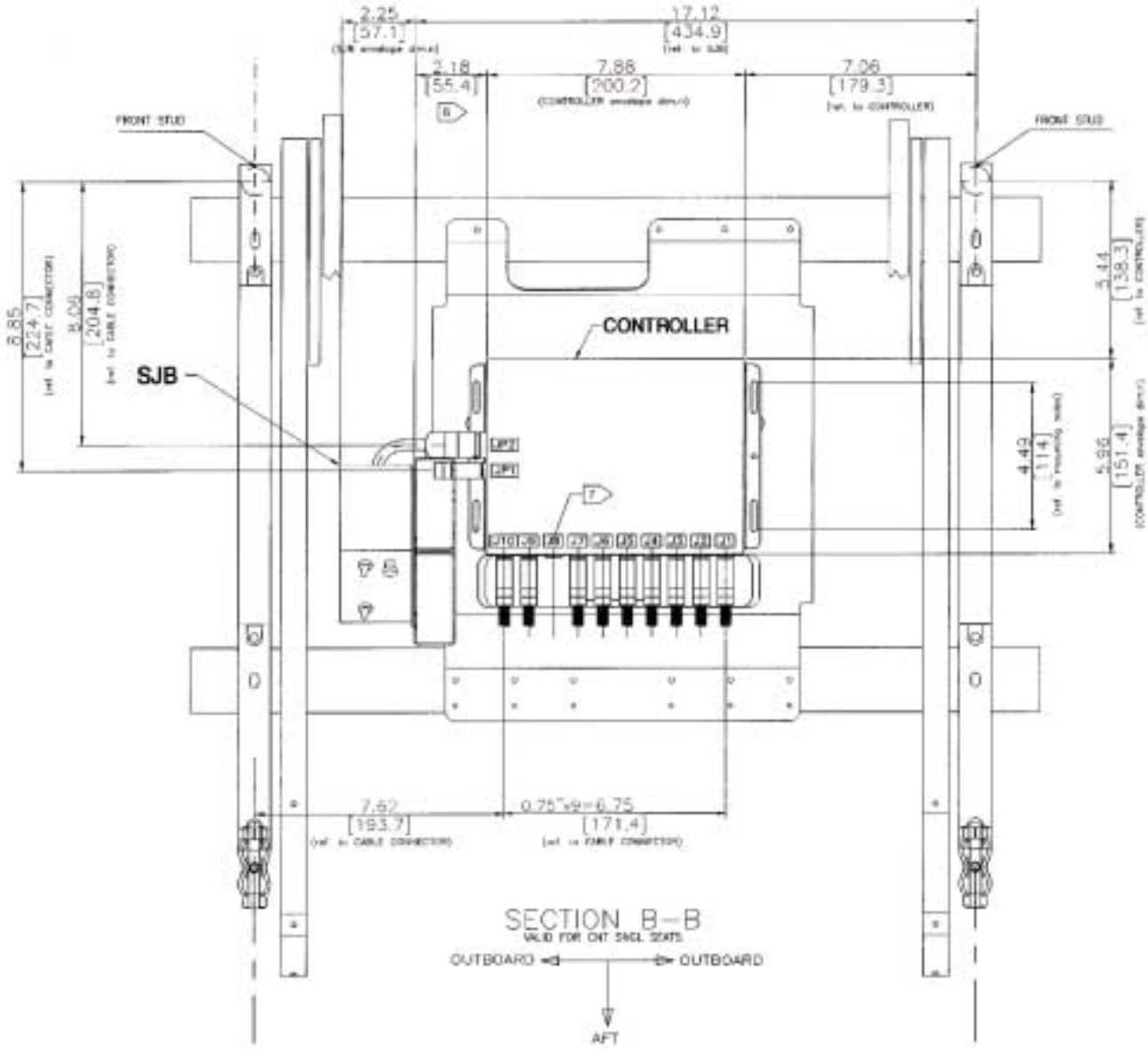

REFERENCE: Installation Drawing 16NC1T/16NC2T Sheet 8 of 23 Rev. 2

FIG. 223c: CONTROLLER INSTALLATION, SINGLE SEAT rear view

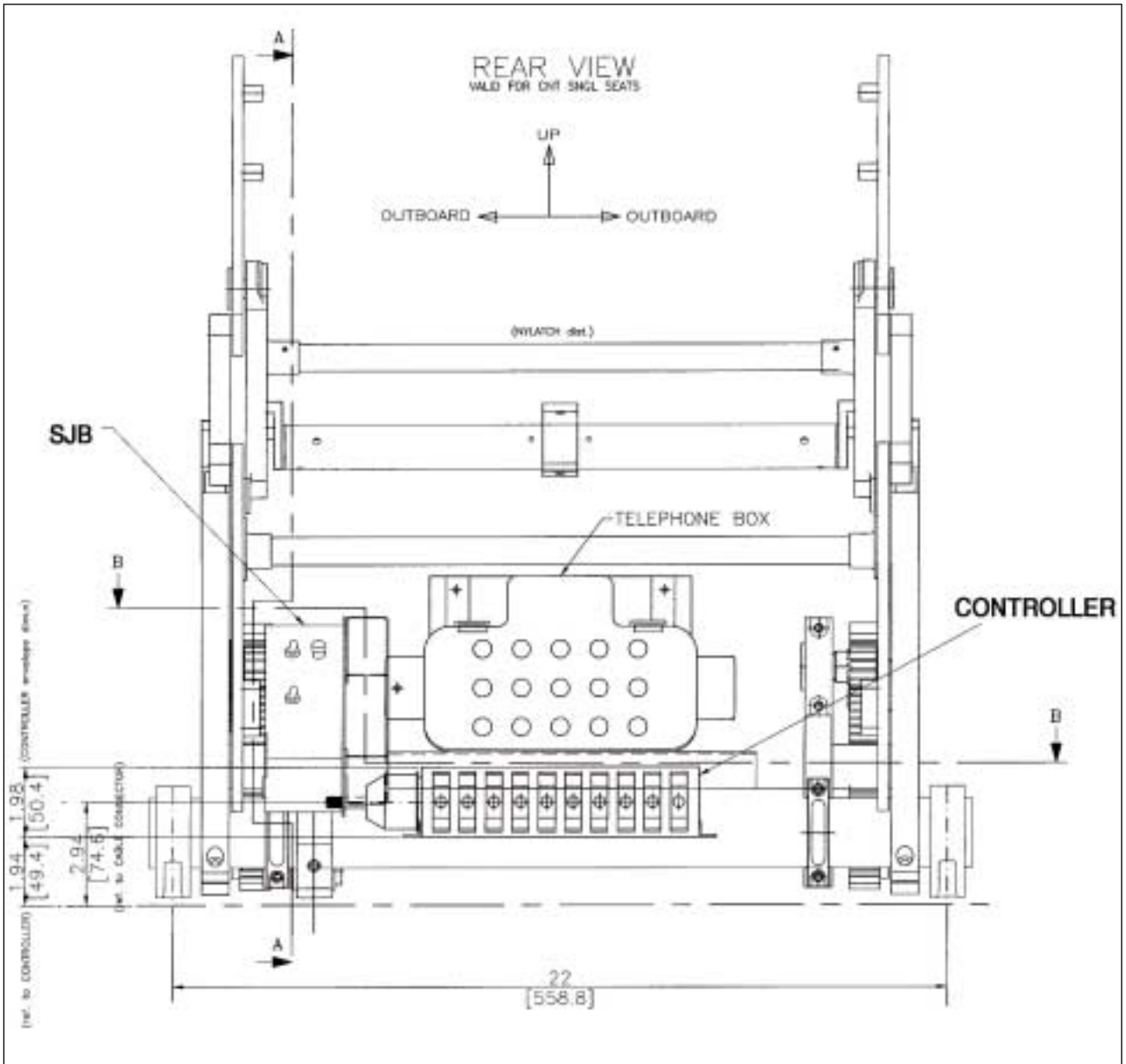

REFERENCE: Installation Drawing 16NC1T/16NC2T Sheet 8 of 23 Rev. 2

G11. LUMBAR PUMP INSTALLATION - SINGLE SEAT

(See fig. 224, 224a, 224b, 224c)

FIG. 224: LUMBAR PUMP INSTALLATION, SINGLE SEAT front view

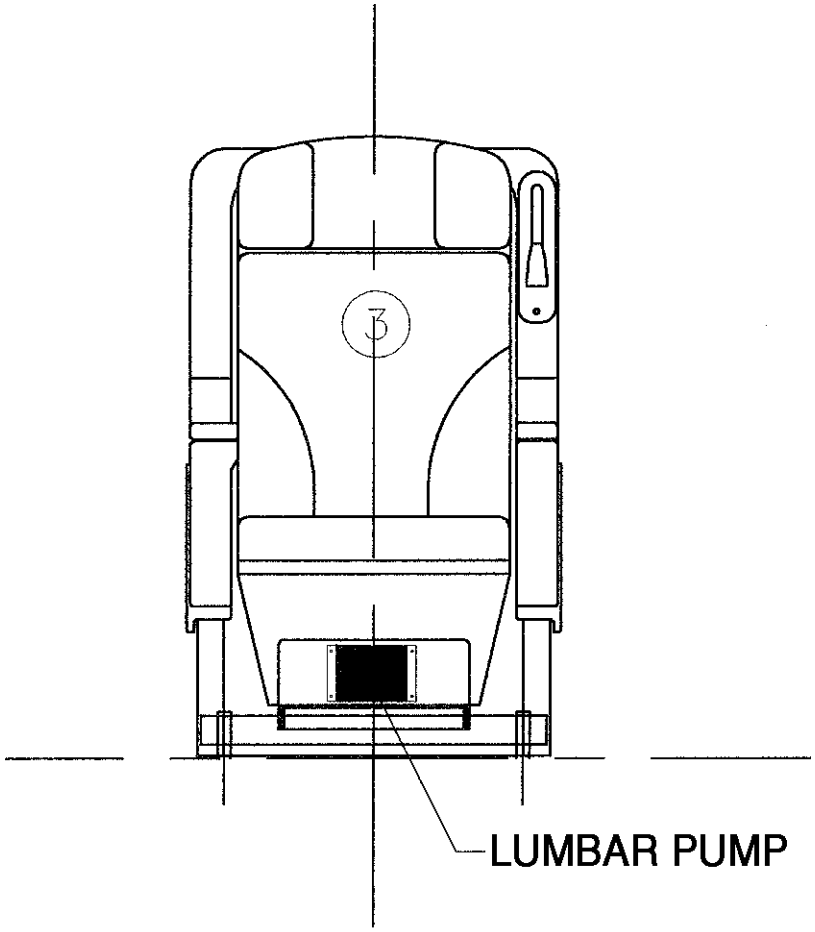

FRONT VIEW VALID FOR
CNTR. SNGL. SEAT

REFERENCE: Installation Drawing 16NC1T/16NC2T Sheet 10 of 23 Rev. 0

FIG. 224a: LUMBAR PUMP INSTALLATION, SINGLE SEAT side view

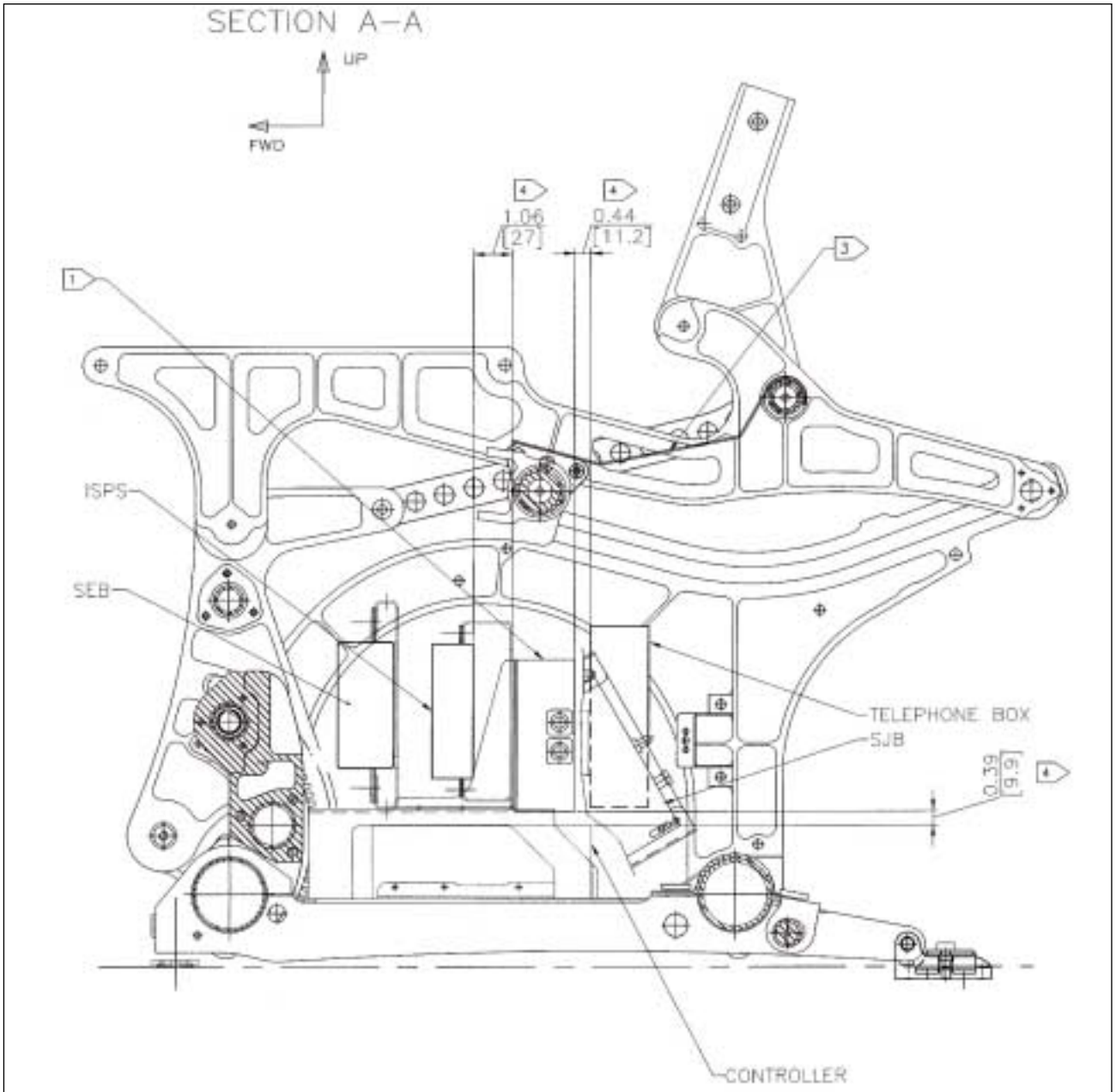

REFERENCE: Installation Drawing 16NC1T/16NC2T Sheet 10 of 23 Rev. 0

FIG. 224b: LUMBAR PUMP INSTALLATION, SINGLE SEAT top view

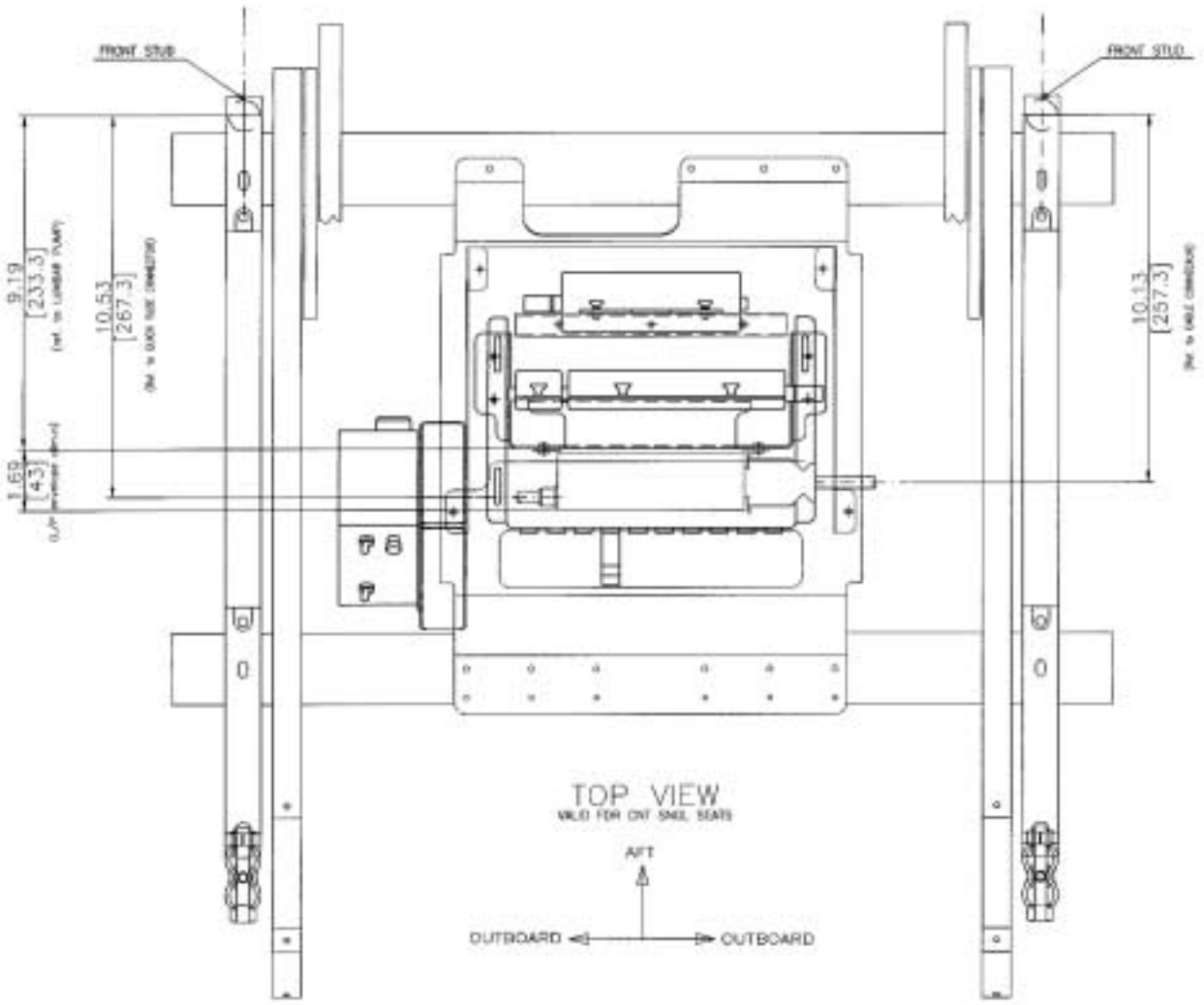

REFERENCE: Installation Drawing 16NC1T/16NC2T Sheet 10 of 23 Rev. 0

FIG. 224c: LUMBAR PUMP INSTALLATION, SINGLE SEAT rear view

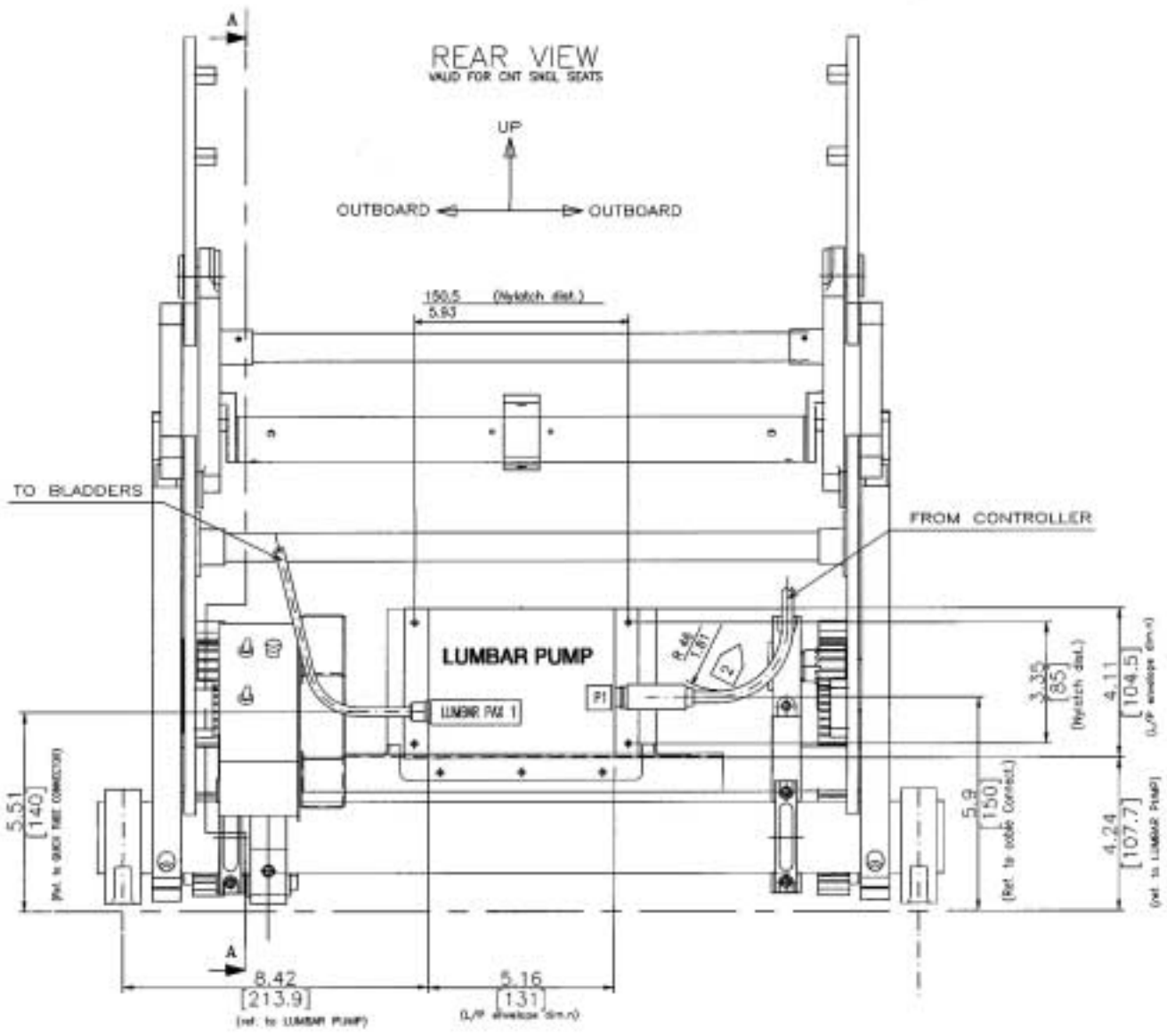

REFERENCE: Installation Drawing 16NC1T/16NC2T Sheet 10 of 23 Rev. 0

G12. ISPS INSTALLATION - SINGLE SEAT

(See fig. 225, 225a, 225b, 225c)

FIG. 225: ISPS INSTALLATION, SINGLE SEAT front view

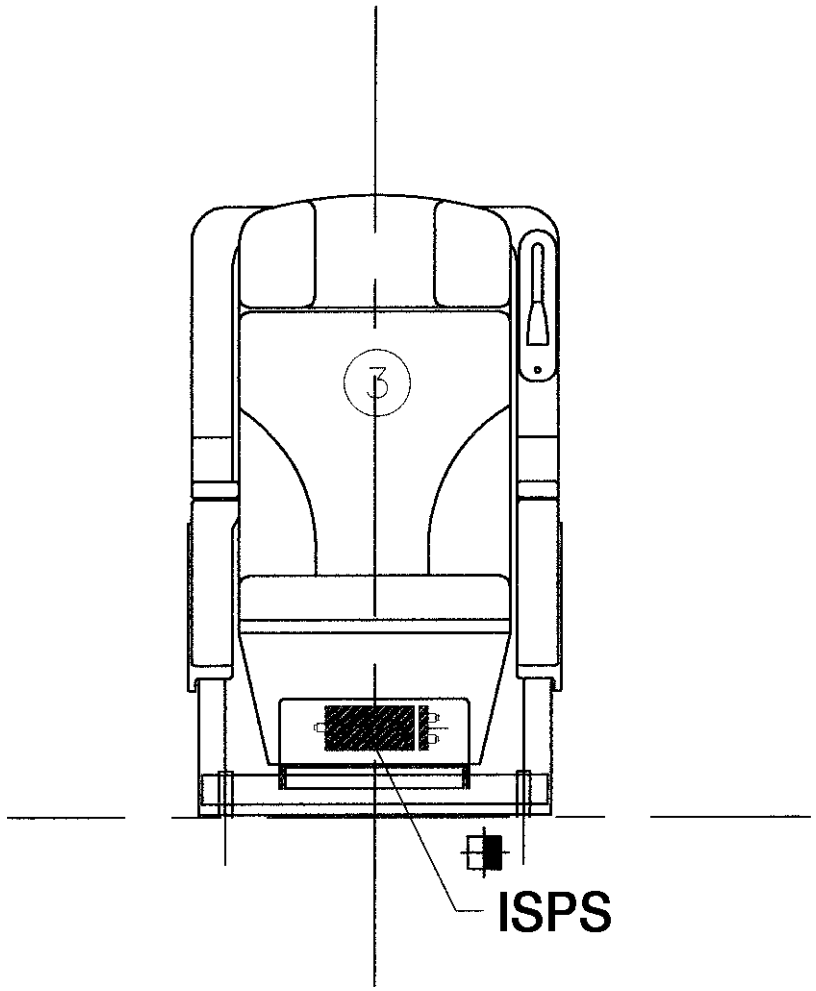

FRONT VIEW VALID FOR
CNTR. SNGL. SEAT

REFERENCE: Installation Drawing 16NC1T/16NC2T Sheet 12 of 23 Rev. 1

FIG. 225a: ISPS INSTALLATION, SINGLE SEAT side view

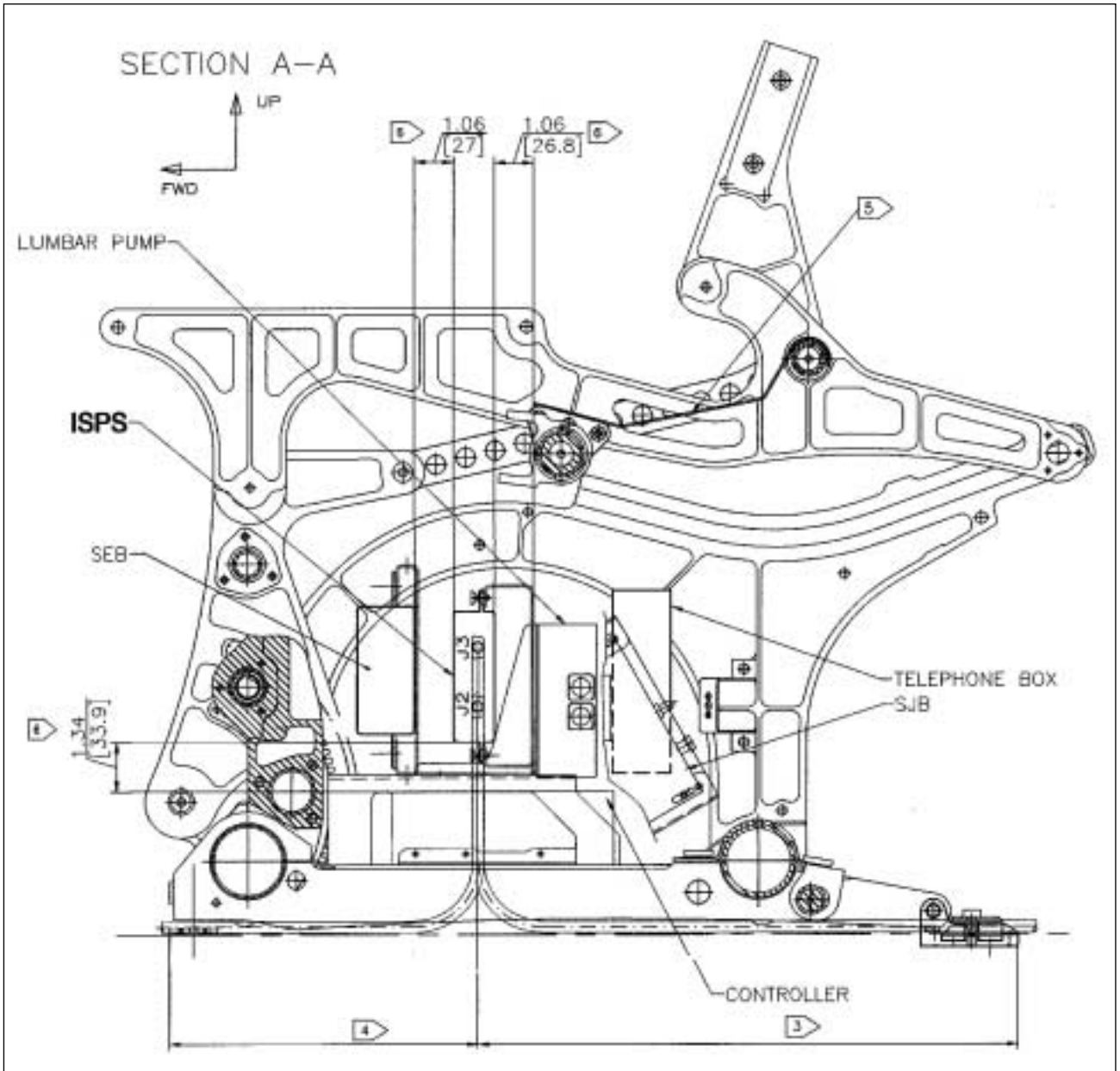

REFERENCE: Installation Drawing 16NC1T/16NC2T Sheet 12 of 23 Rev. 1

FIG. 225b: ISPS INSTALLATION, SINGLE SEAT top view

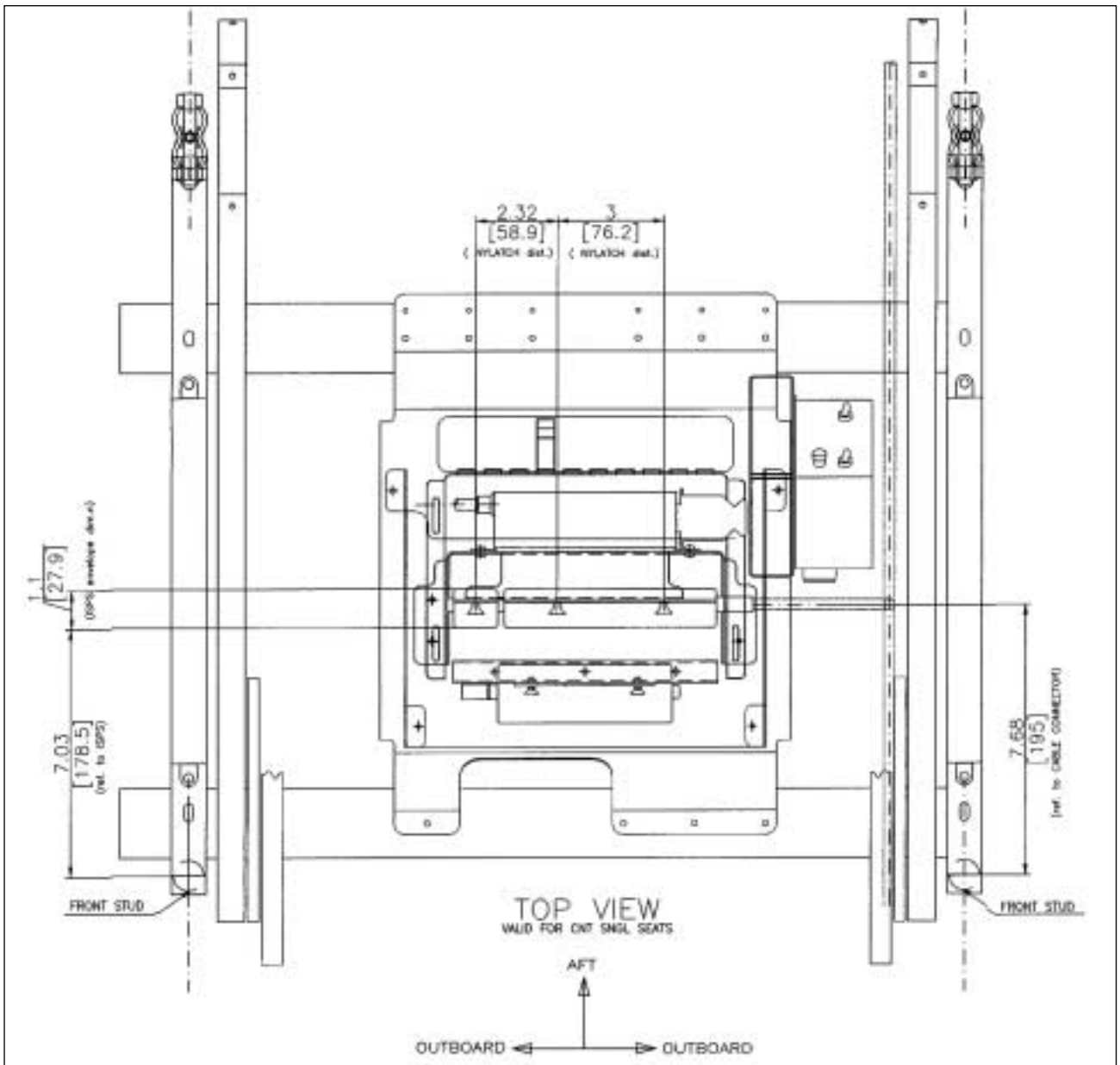

REFERENCE: Installation Drawing 16NC1T/16NC2T Sheet 12 of 23 Rev. 1

FIG. 225c: ISPS INSTALLATION, SINGLE SEAT front view

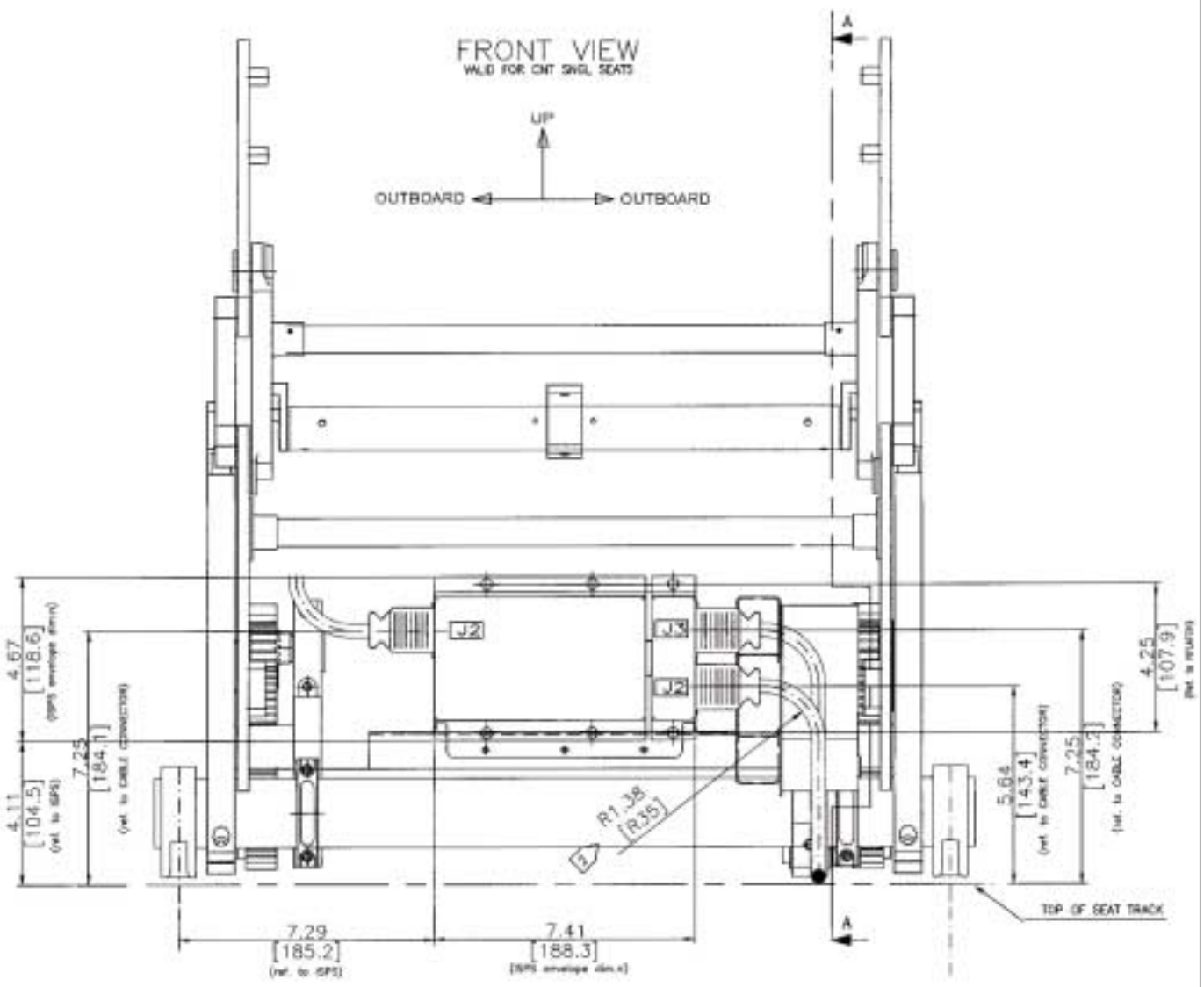

REFERENCE: Installation Drawing 16NC1T/16NC2T Sheet 12 of 23 Rev. 1

G13. TELEPHONE BOX INSTALLATION - SINGLE SEAT

(See fig. 226, 226a, 226b, 226c)

FIG. 226: TELEPHONE BOX INSTALLATION, SINGLE SEAT front view

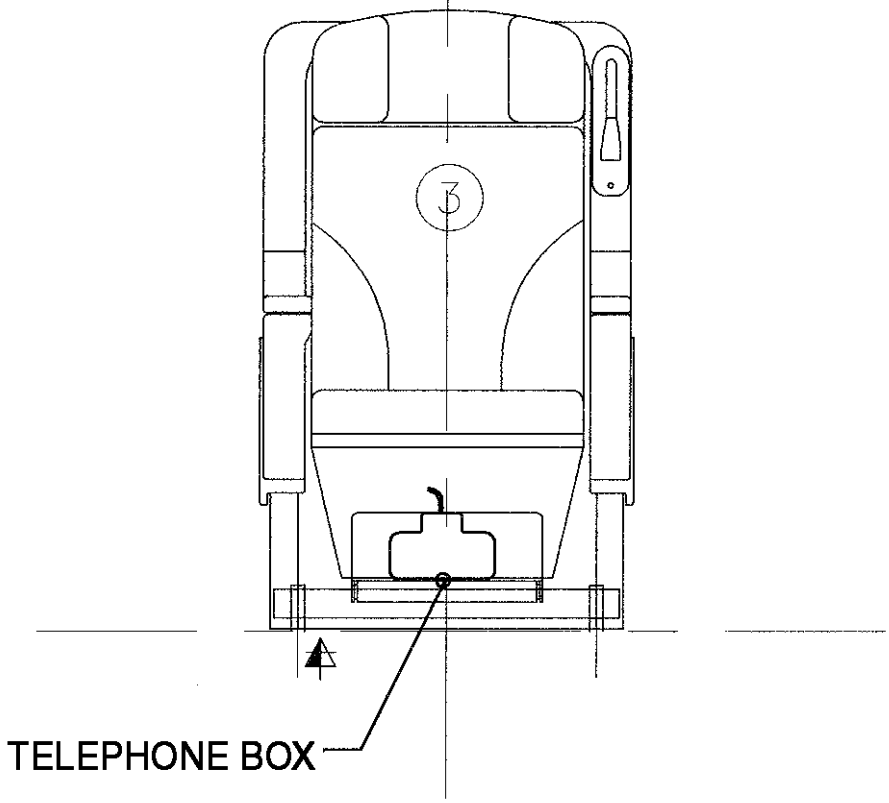

FRONT VIEW VALID FOR
CNTR. SNGL. SEAT

REFERENCE: Installation Drawing 16NC1T/16NC2T Sheet 14 of 23 Rev. 2

FIG. 226a: TELEPHONE BOX INSTALLATION, SINGLE SEAT side view

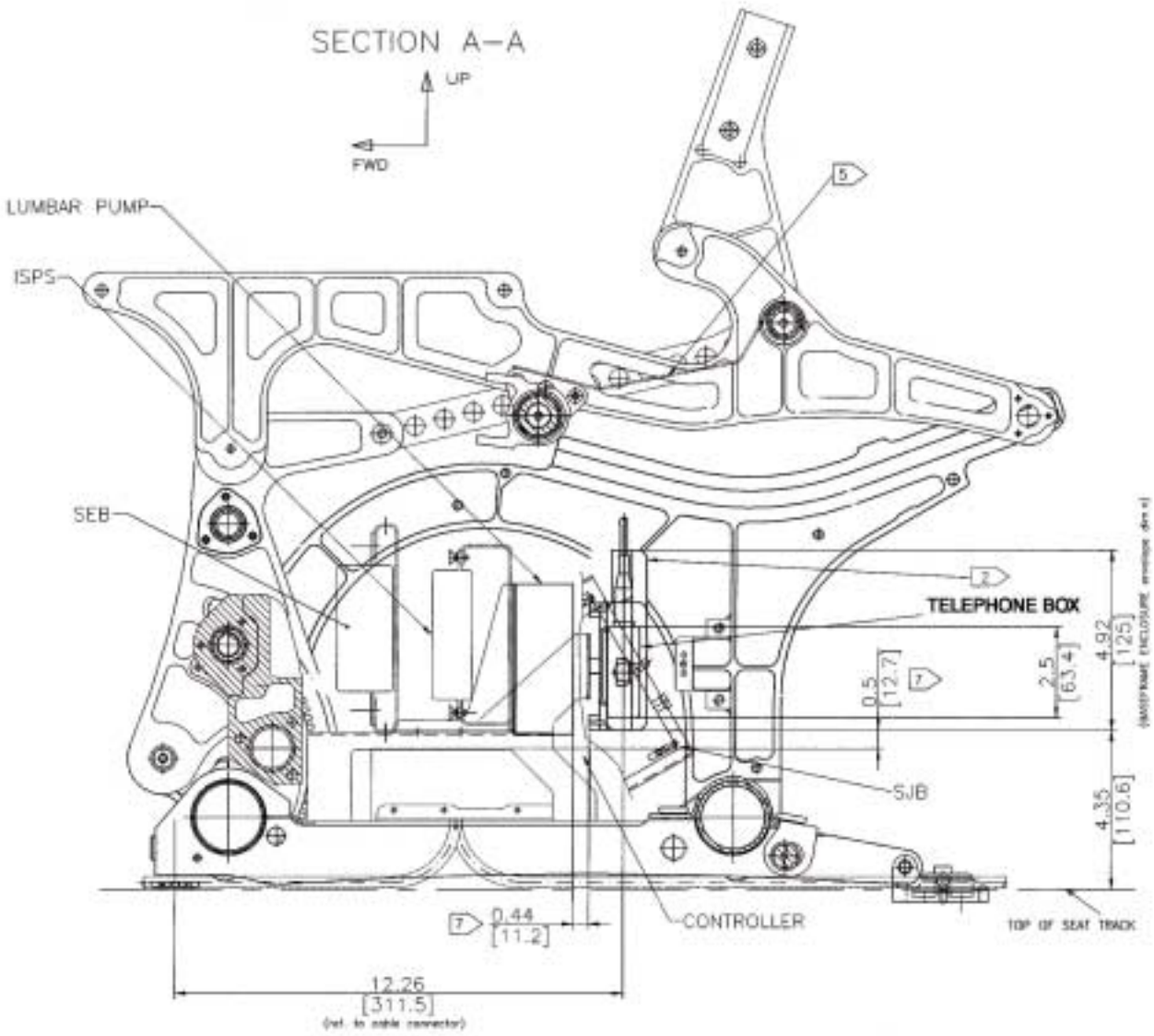

REFERENCE: Installation Drawing 16NC1T/16NC2T Sheet 14 of 23 Rev. 2

FIG. 226b: TELEPHONE BOX INSTALLATION, SINGLE SEAT top view

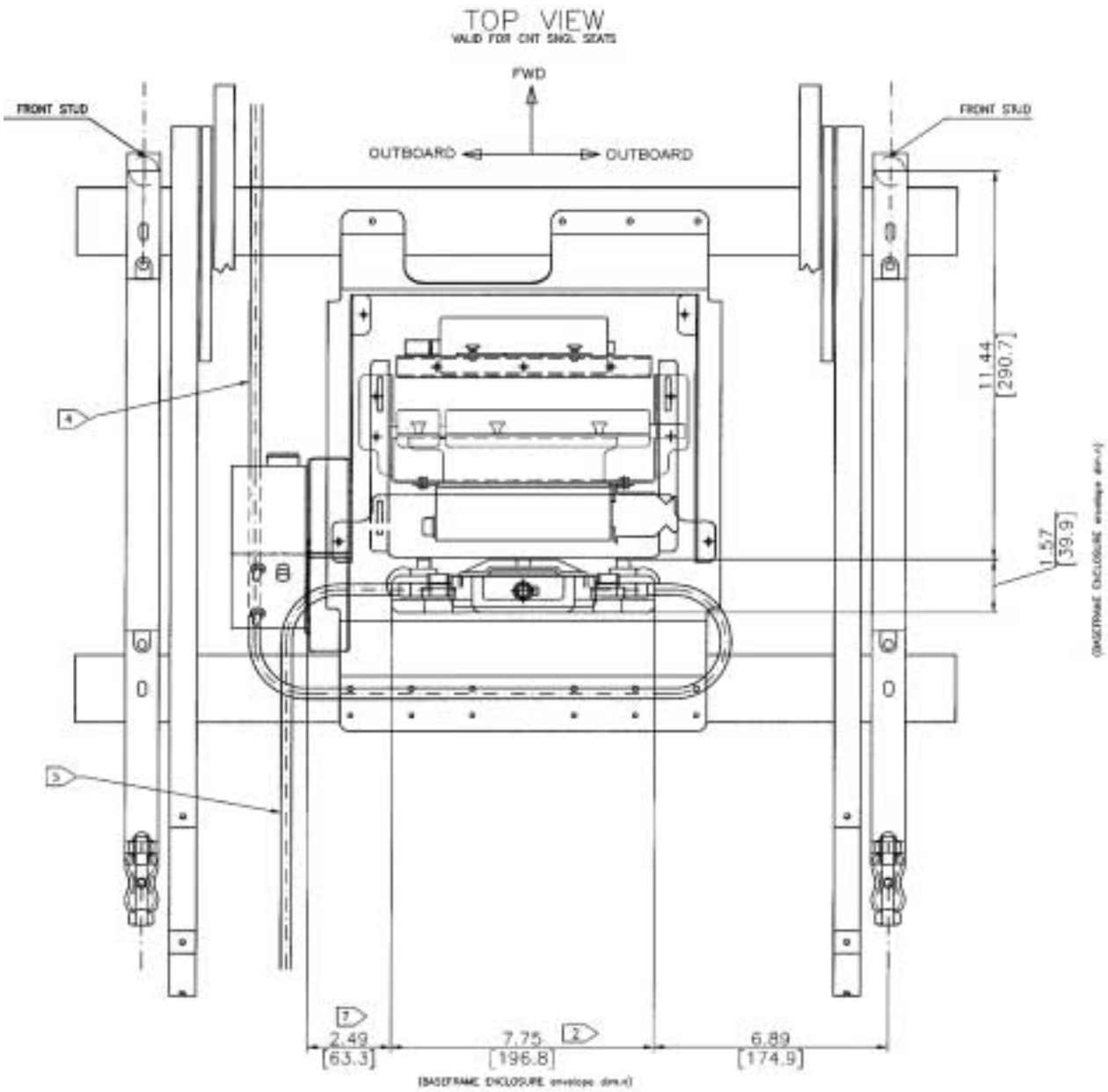

REFERENCE: Installation Drawing 16NC1T/16NC2T Sheet 14 of 23 Rev. 2

FIG. 226c: TELEPHONE BOX INSTALLATION, SINGLE SEAT rear view

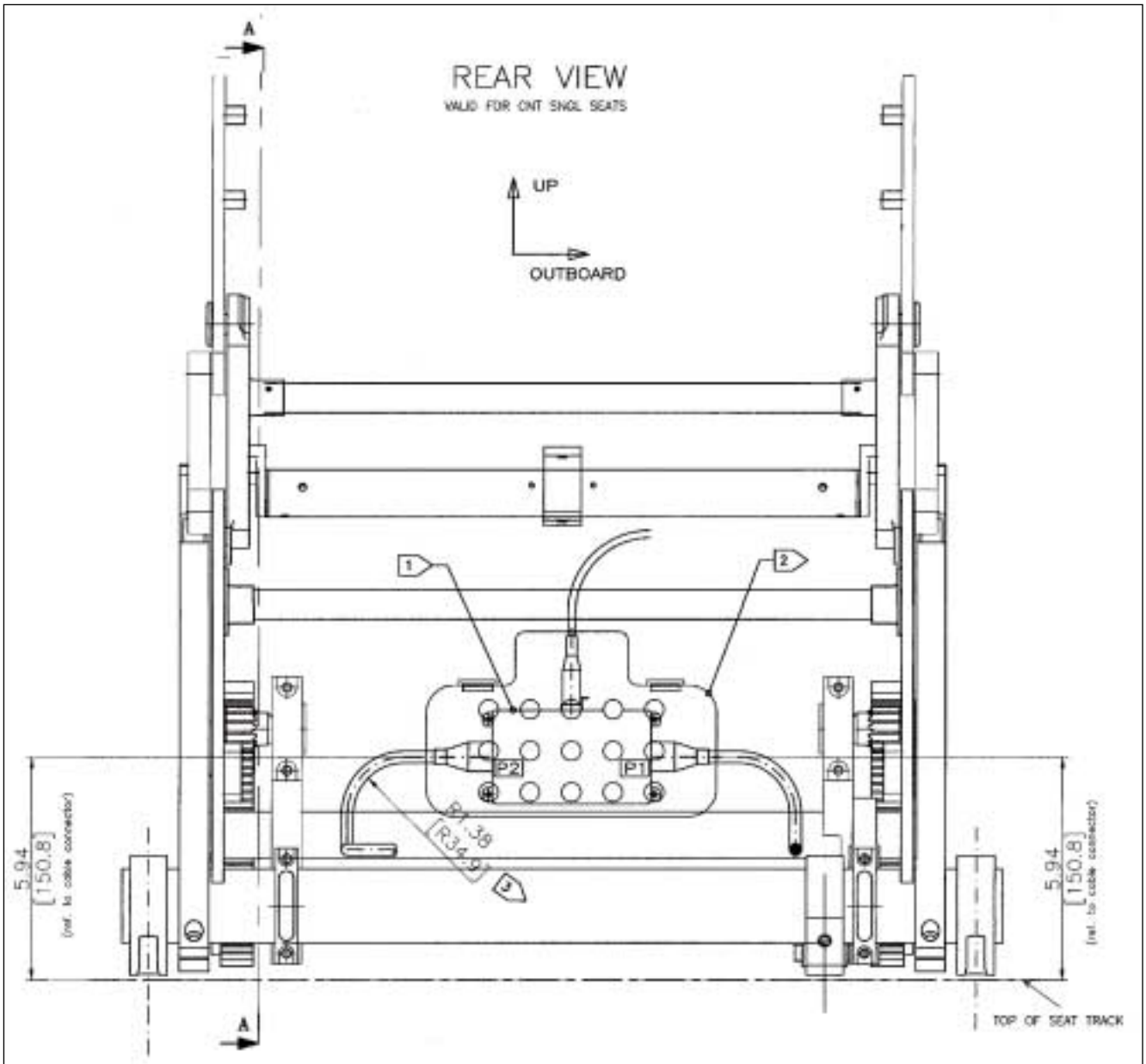

REFERENCE: Installation Drawing 16NC1T/16NC2T Sheet 14 of 23 Rev. 2

H. ELECTRICAL INSTALLATION OVERVIEW

(See Attachment "E")

(1) In order to give an additional help to understand the seat electrical installation, the attachment "E" contains electrical components pictures of all the systems installed on AZ B767 Lie Flat seat.

I. IN-ARM-TABLE ADJUSTMENT

(See fig. 227)

(1) To adjust the horizontal alignment of the complete meal tray rotation support on the upper joint, use set screw (A).

(2) To adjust the horizontal alignment of the complete mealtray rotation support on the lower joint, use set screws (B).

NOTE: Sliding table force is 19.62N = 4.4lb (4.9N = 1.1lb)

FIG. 227: IN-ARM-TABLE ADJUSTMENT, UPPER JOINT

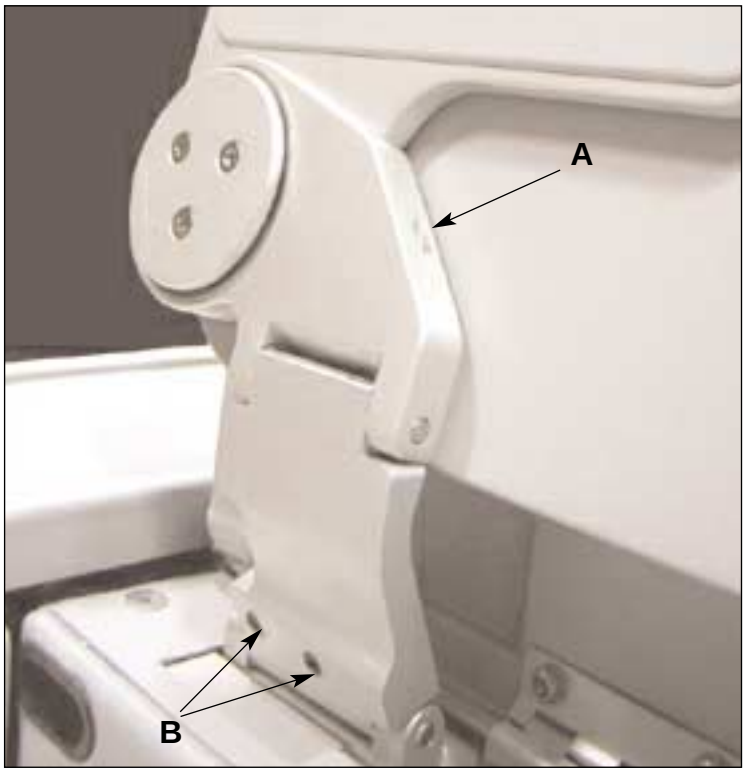

J. HEADREST ADJUSTMENT

(See fig. 228)

Remove headrest cushion to acces to adjustment bolts or screws.
Suggested friction force 7lbs for Up/Down travel, Tilt and Folding Ears. Increase/decrease the friction force to suit average passengers.

(1) To adjust friction force for UP/Down Travel.

(a) Tight both screw sets (A) to increase friction force and vice-versa.

(2) To adjust friction force for Folding Ears.

(a) Tight vertical hinge bolts (B) to increase friction force and vice-versa.

NOTE: Headrest ears movement force is 39.24N = 8.8lb (4.9N = 1.1lb)

FIG. 228: HEADREST ADJUSTMENT

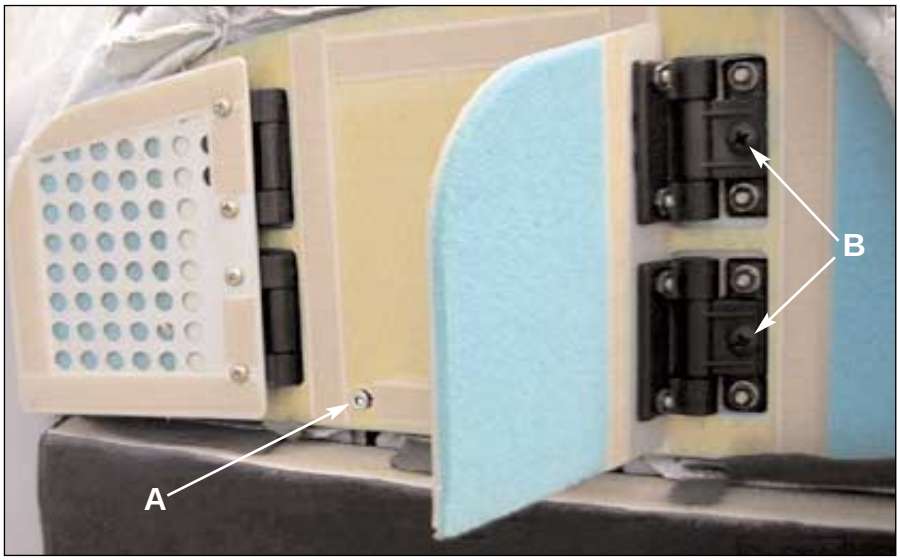

K. FOOTPAD ADJUSTMENT

(See fig. 229)

The friction force to move the footpad can be adjusted by means of its attaching screws and nuts.

(1) Raise the extremities of the cushion to access to the adjustable lateral screws (A) and nuts (B).

(2) Tight/untight nut (B) until reaching the desired friction.

NOTE: The suggested friction force is 1.5 kg.

FIG. 229: FOOTPAD ADJUSTMENT

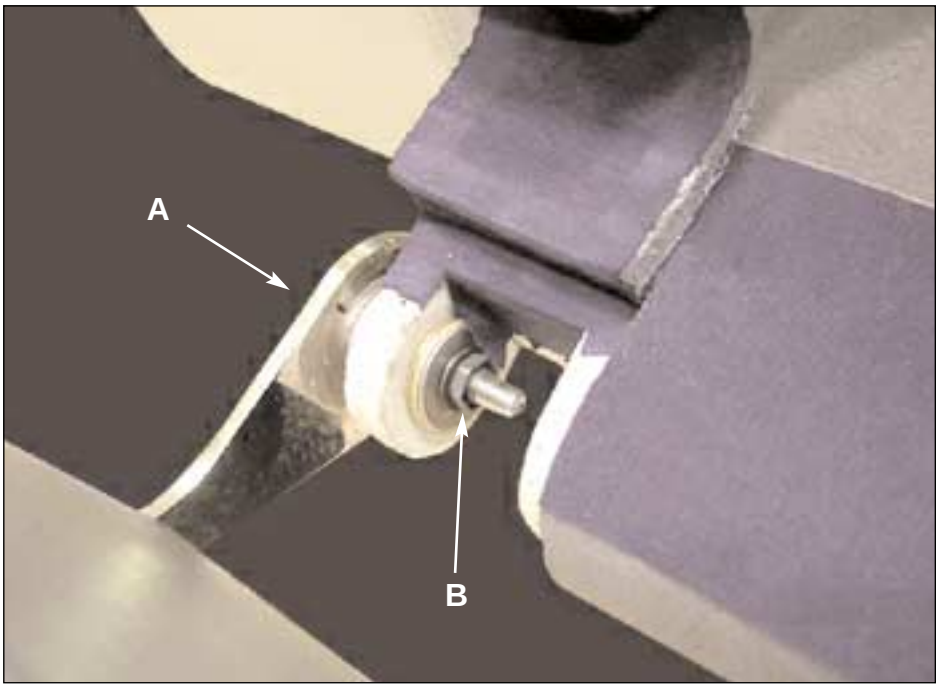

L. TROUBLESHOOTING

(1) Refer to Tab. 203 for troubleshooting procedures.

TABLE 203: TROUBLESHOOTING PROCEDURES

TROUBLE	PROBABLE CAUSE	CORRECTIVE ACTION
A. Flat Position		
(1) Seat movement by means of actuator does not work	(a) Control panel does not work	Replace control panel
	(b) Cable between control panel and Interface Board is broken or loosen	Re-tight or replace cable
	(c) Interface Board is broken	Replace Interface Board
	(d) Set up not done	Do set up (see page 204 *Actuators Calibration*)
	(e) One or more actuators are broken	Replace actuator(s)
B. Lumbar system		
(1) Lumbar bag does not inflate/deflate	(a) Lumbar switch is broken	Replace keypad
	(b) Cable between control panel and Interface Board is broken or loosen	Re-tight or replace cable
	(c) Interface Board is broken	Replace Interface Board
	(d) Lumbar system is broken	Replace lumbar system
	(e) Connection tube between lumbar system and lumbar bladder is disconnected	Re-connect it

TABLE 203: TROUBLESHOOTING PROCEDURES (Continued)

TROUBLE	PROBABLE CAUSE	CORRECTIVE ACTION
C. Armrest		
(1) Armrest movement does not work or does not work properly	(a) Cable is loosen or broken	Re-tight or replace cable
	(b) Lock mechanism is broken	Replace it.
	(c) Actuator is broken	Replace it
	(d) Controller is broken	Replace it
D. Floor track attachment		
(1) Seat assembly does not lock securely into floor track	(a) Lock worn or damaged mechanism	Visually check damaged parts; replace as required
	(b) Anti-rattle device is loosen	Re-tighten
(2) Legs loose in floor track	(a) Studs in legs extend too far	Adjust stud(s) by screwing into leg (for torque value see Chapter 2 - para. C)
	(b) Anti-rattle device is loosen	Re-tight

3. DISASSEMBLY

A. GENERAL

(1) Disassembly instructions, herein given, assume that complete overhaul of seat assembly is to be accomplished; when incomplete disassembly is required for repair or replacement of defective parts, remove only those parts required for access to, and for replacement of defective parts.

(2) Before any disassembly operation, personnel shall read carefully all instructions and study illustrations applicable to the equipment under going overhaul.

(3) All removed assemblies and subassemblies shall be labelled or otherwise identified with exact installed position to facilitate reassembly.
***CAUTION* : NO ATTEMPT SHALL BE MADE TO REMOVE RIVET-MOUNTED ASSEMBLIES OR DETAIL PARTS UNLESS DAMAGE NECESSITATES REPLACEMENT OF A PROCURABLE PART (REFER TO ILLUSTRATED PARTS LIST FOR LIST OF PROCURABLE REPLACEMENT PARTS).**

(4) As an overhaul aid, a frame or fixture to simulate the related aircraft floor mounting provisions is recommended.

B. MAIN DISASSEMBLY

B.1 TOP SHELL

(1) To remove top shell, move the seat in recline position and let endbays down.

(2) Release top shell by removing two attaching screws (A). Push shell down and fwd to release it. *Note: Before removing top shell , remove reading light fairing by means of two fwd screws (see fig. 313). Then, disconnect audio jack/reading light cables (B); remove plastic clamps* (C).

(3) Remove upper shell.

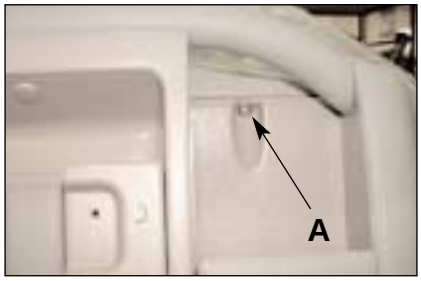

FIG. 301: REAR VIEW OF THE TOP SHELL

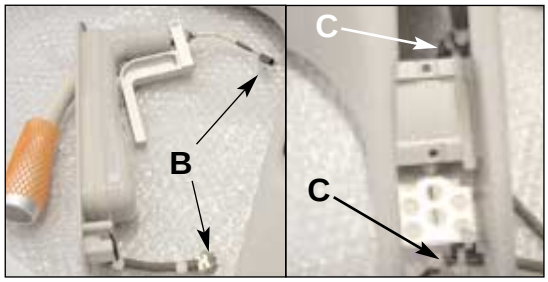

FIG. 301A: READING LIGHT/AUDIO JACK CONNECTORS; CABLES FIXED WITH PLASTIC CLAMPS

B.2 LOWER SHELL

Note 1: To remove lower shell, move the seat in upright position.
Note 2: Lower shell can be removed without removing top shell.

(1) Remove footwel (160) by means of its three uppe attaching screws (170) (see IPL Fig. 1).
(2) Remove shoes compartment (see Fig. 302) by acting on the attaching screws (A).
(3) Pull audio jack/reading light cables down carefully.

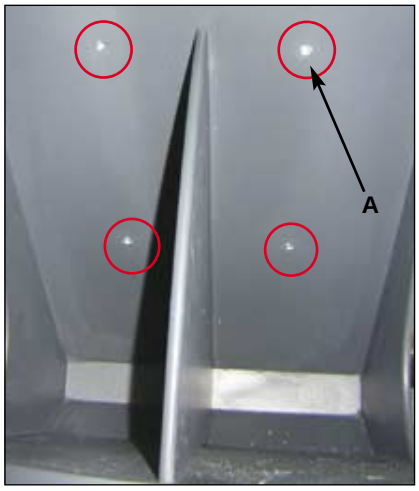

FIG. 302:
SHOES COMPARTMENT,
REAR VIEW OF A DBL SEAT

(4) Remove rear panel by means of two screws (A) from both sides (see fig. 302A).

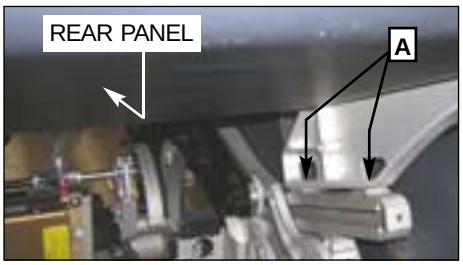

FIG. 302A:
REAR PANEL,
REAR VIEW OF THE SEAT

(5) Remove lateral bolt and bushing from both inner sides (see fig. 302B).
Raise and pull lower shell upward.

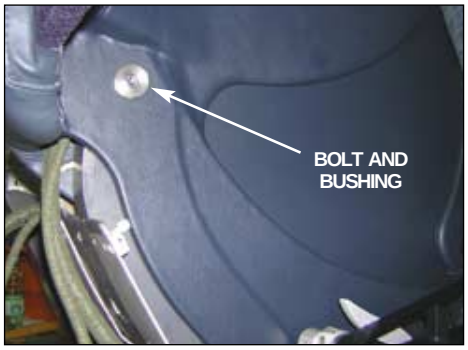

FIG. 302B:
REAR VIEW OF THE SEAT,
CNT ARMREST

B.3 SEAT PAN

(1) Raise or remove cushion (joint with legrest cushion).
(2) Remove faring (300) from both sides of the seat pan by acting on its three attaching screws (310) (see IPL Fig. 1).

(3) Raise legrest. Disconnect footrest actuator cable (A) (see fig. 303); disconnect legrest actuator cable (B) (see fig. 303A).

(4) Remove two lateral pins (70) (see IPL Fig. 9); remove also legrest actuator pin (C) (see fig. 303).

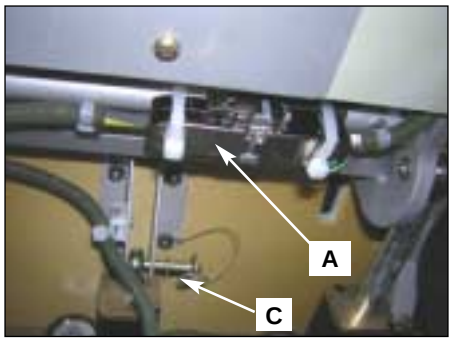

FIG. 303:
LOWER VIEW OF THE LEGREST

(5) Slide out seat pan assy with legrest

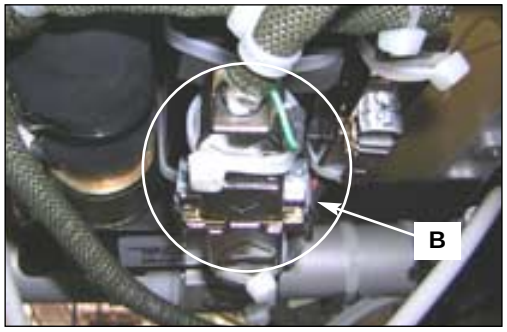

FIG. 303A:
LOWER VIEW OF THE LEGREST

B.4 LEGREST ASSY

(1) To remove legrest assy from seat pan assy, free actuator by removing bolt (A) (see fig. 304).

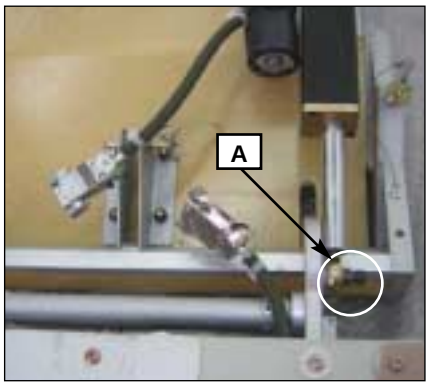

FIG. 304:
LOWER VIEW OF THE SEAT PAN

(2) Remove two screws (B) and respective attaching nuts (see fig. 304A).

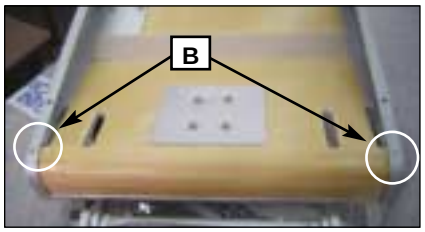

FIG. 304A:
UPPER VIEW OF THE SEAT PAN

(3) Slide tube out to free legrest assy (see fig. 304B).

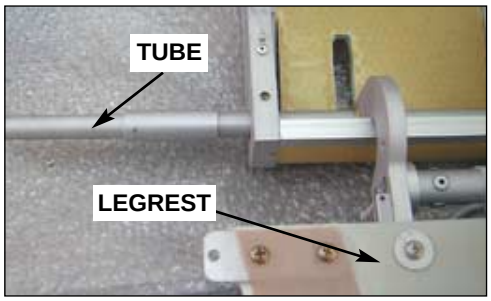

FIG. 304B:
LOWER VIEW OF THE SEAT PAN/LEGREST

B.5 UPPER ENDBAY ASSY

(1) Firstly, remove control panel. To do so, remove two screws (A) under handset to free cradle (see fig. 305).

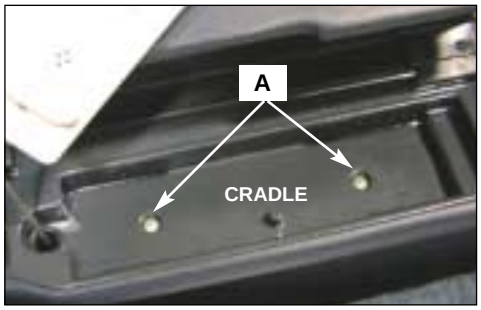

FIG. 305:
UPPER VIEW OF THE HANDSET CRADLE

(2) Raise the fwd part of the handset cradle and remove two screws (B) that attach control panel assy on the upper endbay (see fig. 305A).

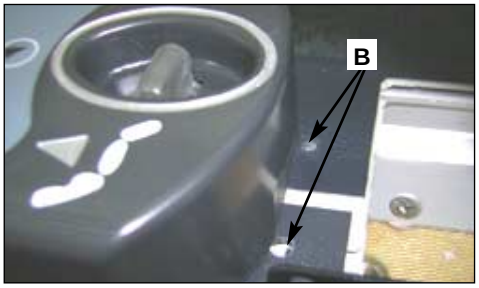

FIG. 305A:
UPPER VIEW OF THE CONTROL PANEL

(3) Pull control panel assy forward and raise it. Remove plastic clamp and unplug both con nectors (blue and white) (see fig. 305B). Remove control panel.

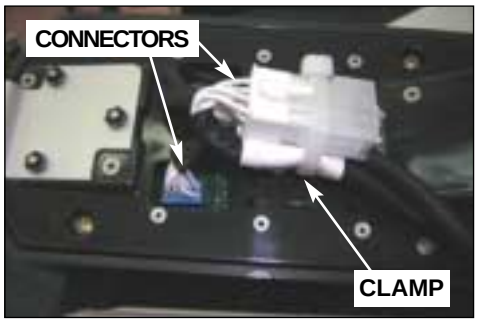

FIG. 305B:
LOWER VIEW OF THE CONTROL PANEL

(4) Remove handset as follows: remove two screws (C) (see fig. 305C) that attach cord reel cable to the hadset. Unplug its connector.

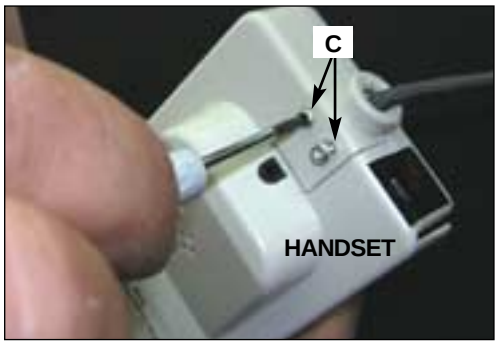

FIG. 305C:
REAR VIEW OF THE HANDSET

(5) Free manual release assy from the upper endbay by means of two attaching screws (D) (see fig. 305D).
Without disconnecting manual cables, incline manual release assy slightly so to permit passing through its housing.

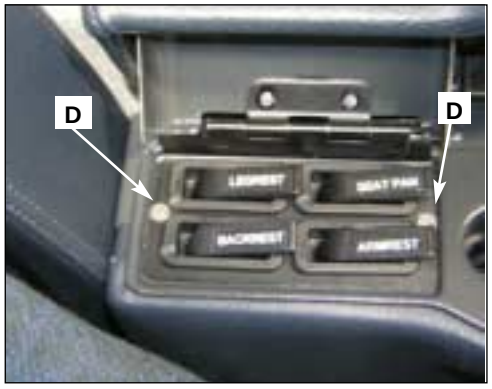

FIG. 305D:
UPPER VIEW OF THE MANUAL RELEASE LEVERAGE

(6) Remove three screws (E) (see fig. 305E); the upper endbay is free to be removed.

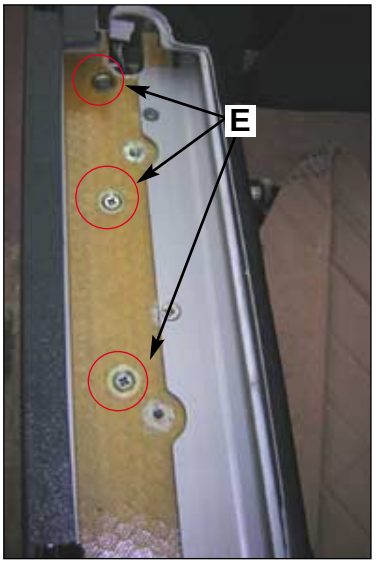

FIG. 305E:
UPPER VIEW OF THE ENDBAY

B.6 LOWER ENDBAY ASSY (FIXED)

(1) Move the seat in recline position. Then, disconnect manual release cables (seat pan/legrest/backrest/aisle armrest) from their respective actuators.
(2) Unplug aisle armrest actuator connector by removing screw (A) and clamp (B) (see fig. 306).
(3) Loose, without removing, two screws (A) (see fig. 317) that fix Interface Board.

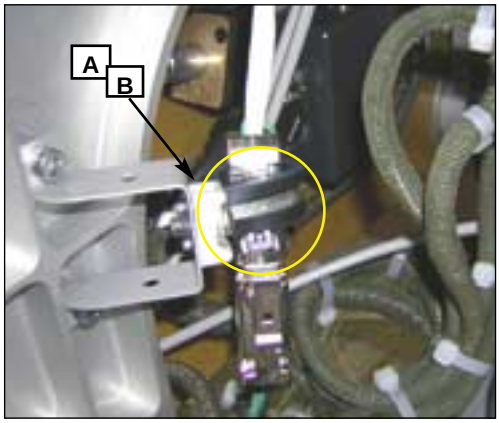

FIG. 306: CONNECTOR, AISLE ARMREST INNER VIEW FROM THE REAR OF THE SEAT

(4) Remove five bolts (D) to free endbay assy from the seat structure (see fig. 306A, 306B, 306C).

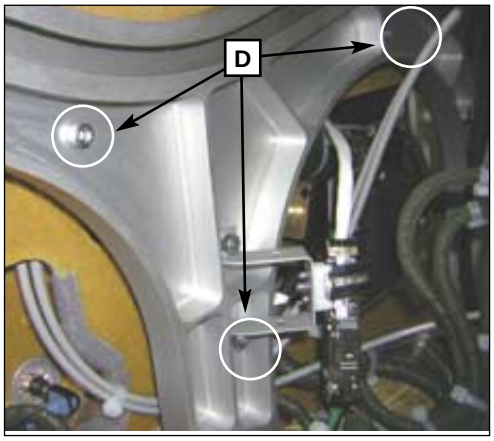

FIG. 306A: AISLE ENDBAY, INNER VIEW FROM THE REAR OF THE SEAT

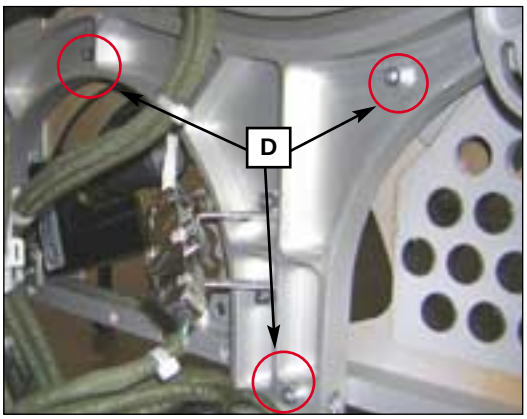

FIG. 306B: OUTBD ENDBAY, INNER VIEW FROM THE REAR OF THE SEAT

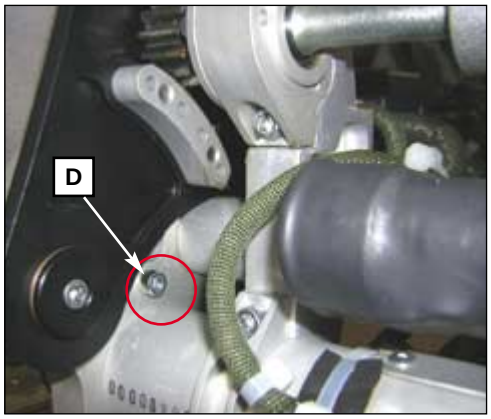

FIG. 306C: OUTBD ENDBAY, INNER FRONT VIEW OF THE SEAT

Applicable to DBL seats, aisle side only:

(5) Remove leg cover by pulling it out.

(6) Remove reinforcement (F) by means of three screws (G); besides, loose screw (H) to permit cover removal.
(see fig. 306D)

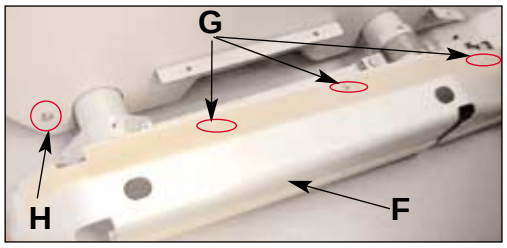

FIG. 306D:
LEG, AISLE SIDE

(7) Remove bolt (J); loose bolts (K); remove rivets (L). Remove leg, and then endbay.
(see fig. 306E)

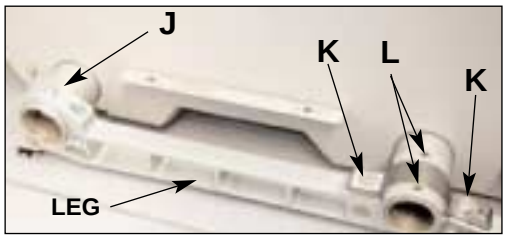

FIG. 306E:
LEG, AISLE SIDE

B.7 CNT ARMREST

Note: To remove CNT armrest, the seat must be in upright position.

(1) Unplug armrest cable connectors (RH/LH) (see fig. 307).

(2) Unplug Seat Junction Box cable from Controller.

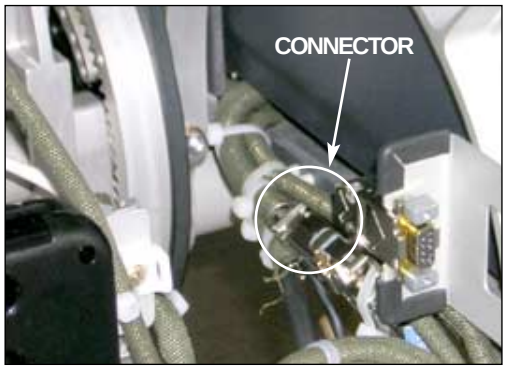

FIG. 307:
CNT ARMREST CONNECTOR, LH
REAR VIEW OF THE SEAT

(3) On aisle pax place only, unplug Power IN/OUT connectors by removing eight screws (A); remove also two bolts (B).
(see fig. 307A)

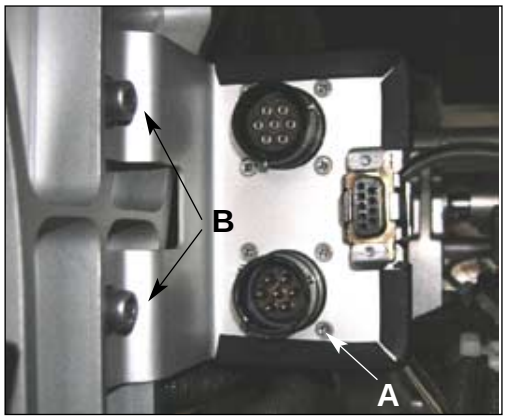

FIG. 307A:
POWER IN-OUT CONNECTORS,
REAR VIEW OF THE SEAT

(4) To remove fwd escutcheon, remove both ashtrays to access to the attaching screws (C) (see Fig. 307A); remove them.
Open life vest compartment and remove two bolts (D). Raise cocktail table and pull escucheon slightly forward; unplug outlet connectors, then remove escutcheon.

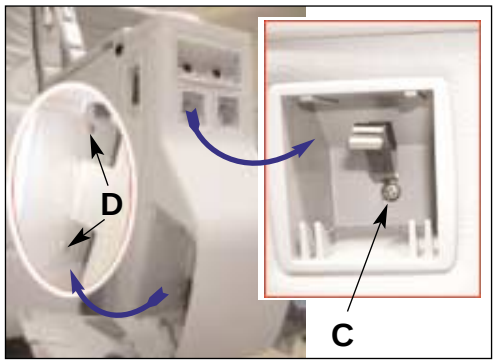

FIG. 307B:
ESCUTCHEON, FWD VIEW

(5) Remove plastic clamps that fix PCU/audio jack/outlet cables. Unplug PCU/audio jack connectors (see fig. 307C).
Free CNT armrest from both cables by passing them through the same endbay to permit its removal.

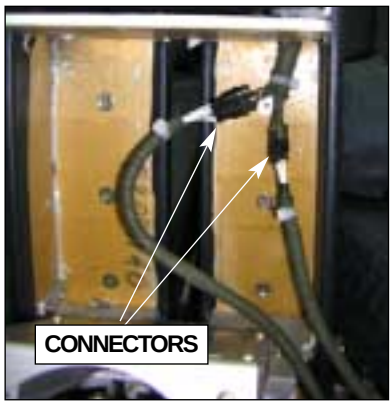

FIG. 307C:
FRONT VIEW OF THE CNT ARMREST

(6) Remove SJB by means of its attaching screws (E) (see Fig. 307D): two screws on SNG seat, four on DBL seat.

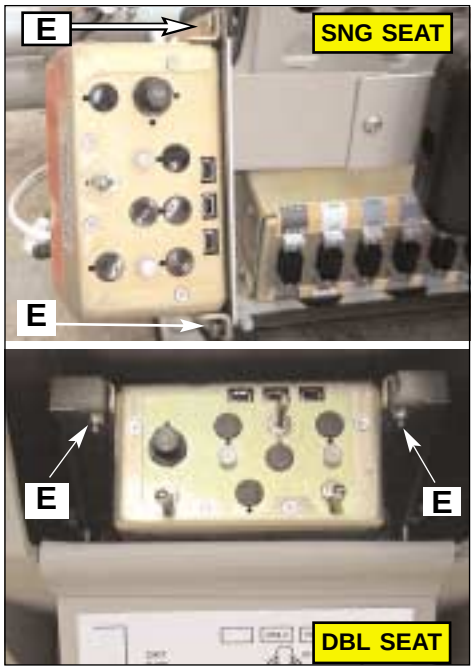

FIG. 307D:
SEAT JUNCTION BOX

(7) Finally, remove rear plate (600)(610) by means of six screws (620) (see IPL Fig. 4 sheet 1 of 3). Remove also plastic clamp support (F) by means of its attaching screw from both sides (see fig. 307E), so to permit CNT arm rest to be slided forward and removed.

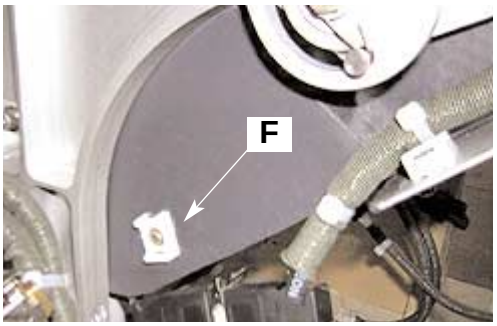

FIG. 307E:
REAR VIEW OF THE SEAT

B.8 BACKREST ASSY

(1) Disconnect lumbar rubber tube from the rear side of the backrest (see fig. 308).
(2) Remove backrest assy from the seat by removing two bolts and nuts from both sides of the backrest (see fig. 308A).

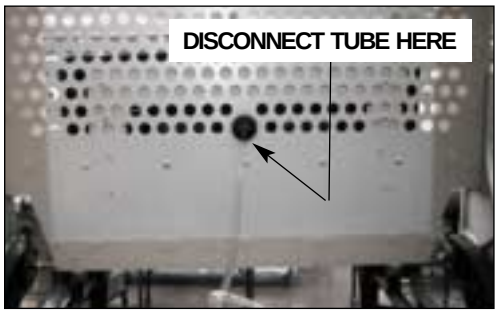

FIG. 308:
REAR VIEW OF THE BACKREST

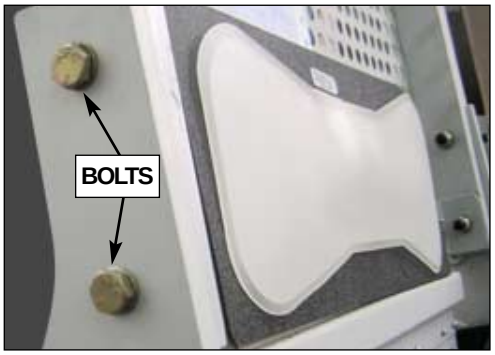

FIG. 308A:
SIDE VIEW OF THE BACKREST

B.9 HEADREST ASSY

(1) Remove two screws (A) (see fig. 309).
(2) Pull both pivots slightly forward to dislugga-ge them, then remove headrest by pulling it down.

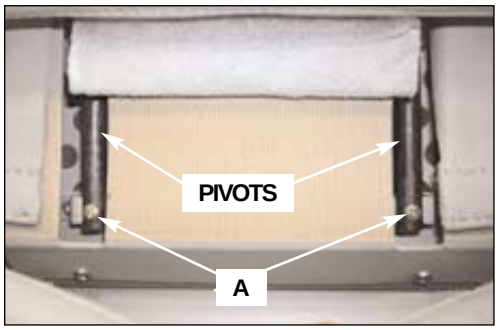

FIG. 309:
FRONT VIEW OF THE HEADREST

C. HEADREST DISASSEMBLY

(1) To remove headrest assy from the backrest, see instruction on para B.9.
(2) Remove RH/LH plates by acting on four screws (A) (see fig. 310).

FIG. 310:
HEADREST, RH PLATE

D. ENDBAY DISASSSEMBLY (OUTBD)

* For aisle endbay, refer to this para
(1) To remove endbay assy from the seat, see instruction on para B.5 and B.6.
(2) Remove fwd fairing (490) by means of screws (560) (see IPL Fig. 3A sheet 1 of 3).
(3) Remove bumper (300) (from aisle endbay) by means of screws (340) (see IPL Fig. 3 sheet 1 of 3).
(4) Remove armcap with hinge by acting on its attaching screws.

(5) To remove endbay actuator, unplug connector; remove screw (A) and pivot (B), both from the inner side of the endbay; remove also screw (C). (see fig. 311)

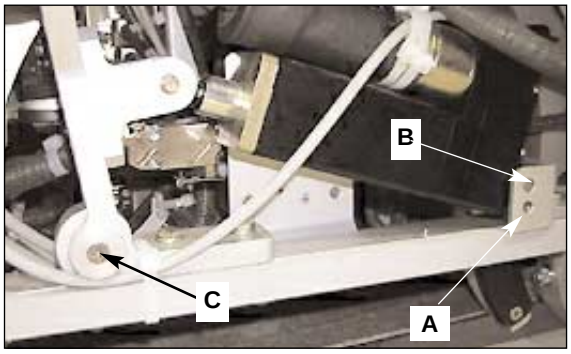

FIG. 311:
SIDE VIEW OF OUTBD ENDBAY

(6) To remove upper endbay, see instruction on para B.5.
(7) To remove control panel assy from the endbay, see instruction on para B.5. To disassembly it, see para *N. Control Panel Disassembly.*
(8) To remove handset, see instruction on para B.5.
(9) To disassembly manual release leverage, see instruction on para *L. Manual Release Assy Disassembly*.

E. CNT ARMREST DISASSEMBLY

(1) To remove CNT armrest assy from the seat, see instruction on para B.7
(2) To remove fwd escutcheon, see instruction on para B.7
(3) To remove cocktail table, pull upward to detach it from its attaching velcro.
(4) Remove armcap with hinge by removing its attaching screws.
(5) Remove IAT table assy by means of set screw (270) and pivot (270) (see IP; Fig. 6).
(6) To remove armrest actuator, remove three screws (715) (see IPL Fig. 4 sh. 1 of 3). Move the upper part of the actuator forward, remove screws (270) and pivot (170) (see IPL Fig. 4A sh. 2 of 2). To free the lower part of the actuator, remove screws (718) (see IPL Fig. 4=) unplug connector and remove plastic clamps.
(7) Remove privacy by means of its attaching screws.
(8) Remove upper armrest by means of screws (780); remove C clamp (750) (see IPL Fig. 4 sh. 1 of 3). Remove also screws that attach actuator support on the lower struc ture.
(9) Remove IAT table compartment fairings by removing fwd screw (see fig. 312).
Note: armcap with hinge should be already removed.

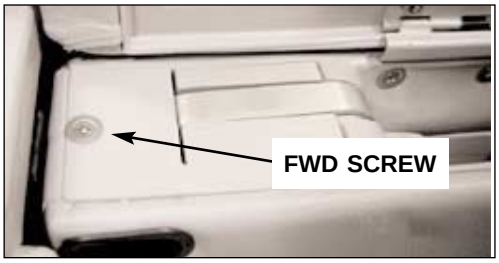

FIG. 312:
UPPER VIEW OF THE CNT ARMREST

(10) To remove outlet assy, untighten its two attaching screws (A) (see fig. 312A); unplug connector.

(11) To remove PCU, untighten its attaching screw (B) (see fig. 312B); unplug connector.

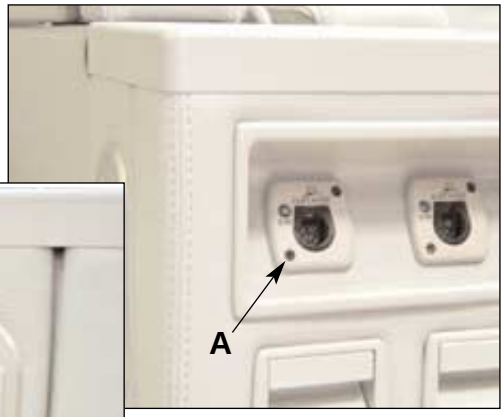

FIG. 312A:
OUTLET ON CNT ARMREST

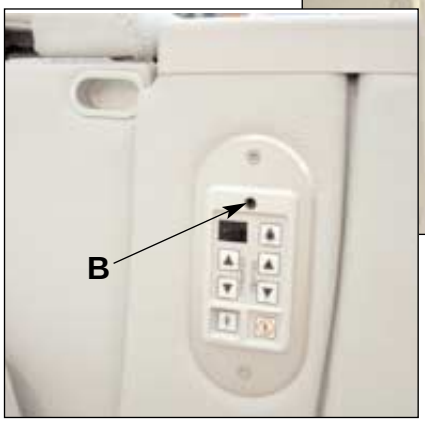

FIG. 312B: PCU

F. SHELL DISASSSEMBLY

(See IPL Fig. 5)

(1) To remove shell assy from the seat, see instruction on para B.1 and B.2.
(2) To remove handle (100), remove plastic covers and then screws (110).
(3) Remove literature pocket spring (50) by removing its attaching screws (70).
(4) Remove reading light assy (with fairing) by means of two screws (A) (see fig. 313).

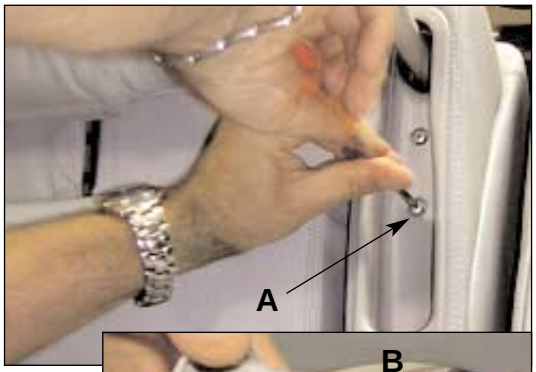

FIG. 313:
READING LIGHT , FWD VIEW

(5) To remove/replace light, loose fastner (B) by unti ghtening screw (C). Remove reading light.

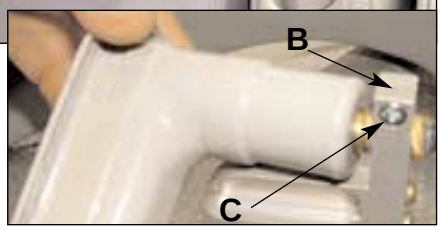

FIG. 313A:
READING LIGHT , REAR VIEW

(6) To replace RJU, remove two rear screws (D).

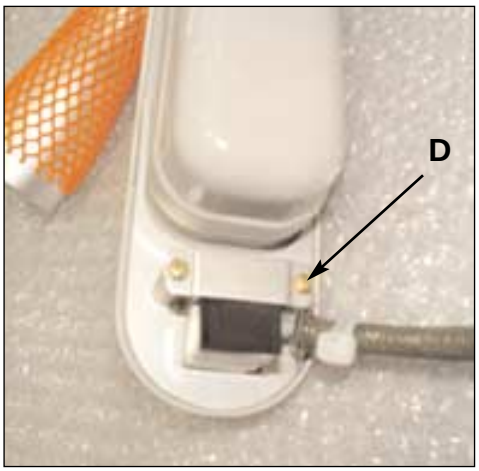

FIG. 313B:
RJU JACK, REAR VIEW

G. IN ARM TABLE DISASSEMBLY

(See IPL Fig. 6)

(1) To remove IAT table assy from the CNT armrest, see instruction on para E - step 5.
(2) Remove leaf table (20) by removing set screw (50); recover hinge (40).
(3) Remove sliding plate (80) by removing screws (180).
(4) Remove endbay arm (90) from table arm (130) by means of set screw (200) and pivot (190).

H. LEGREST ASSY DISASSEMBLY

(See IPL Fig. 7)

(1) Remove footrest actuator by loosening bolt (280). Remove also bolt (530) and nut (810).
(2) Remove lever (530) by means of bolt (540) and nut (480).
(3) Remove manual control cable from actuator by removing circlip.
(4) To remove footrest, remove screw (460) and pivot (450).

J. PRIMARY STRUCTURE DISASSEMBLY

(See IPL Fig. 8)

(1) Remove sliding structure assy (580) by means of screw (740) and nut (690); reco ver pivot (630) and bushing (670).
(2) To remove rotary actuator, see instruction on para *U. Rotary Actuator Disassembly.*

K. LEG ASSY DISASSEMBLY

(See IPL Fig. 10)

(1) Remove fitting rear assy (130) by means of bolt (190) and nut (210) recover washer (200).
(2) Remove fwd stud (30) by loosening ring nut (20).

L. MANUAL RELEASE ASSY DISASSEMBLY

(See IPL Fig. 3)

(1) To detach manual release assy from the endbay, see instruction on para B.5 - step 5.
(2) Remove cover (390) by means of screws (360).
(3) To free levers, remove circlip (800) and pivot (790)

M. READING LIGHT DISASSEMBLY

(1) See instruction on para *F. Shell Disassembly*.

N. CONTROL PANEL DISASSEMBLY

(See IPL Fig. 3)

(1) To remove control panel assy from the endbay, see instruction on para B.5.
(2) Remove cover (1080) by means of its attaching screw. Recover keyboard (1060) and gasket (1130).

O. CONTROLLER DISASSEMBLY

(1) Unplug all cables connectors.
(2) Untight two screws (A) and slide rearward to remove controller (see Fig. 314).

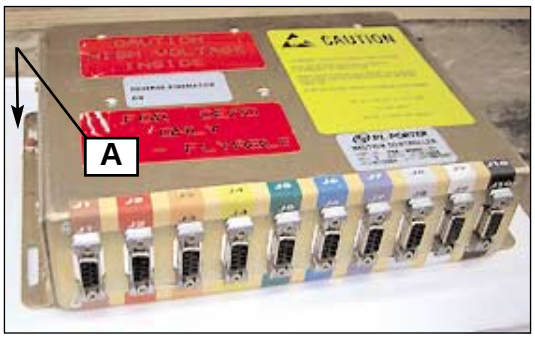

FIG. 314:
CONTROLLER

P. ISPS DISASSEMBLY

(1) Unplug all cables connectors (including seat-to-seat cables).

(2) *DBL SEAT*: Turn 1/4 four screws (A) and, by acting on the two nylatches too, remo ve ISPS with its bracket support. (see fig. 315)

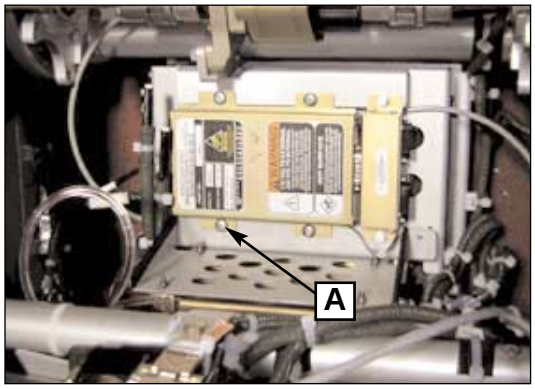

FIG. 315:
ISPS INSTALLED ON DBL SEAT

SNG SEAT (see fig. 315A): Untight rear screws (not shown).

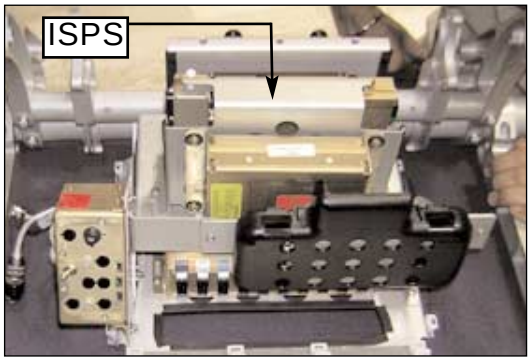

FIG. 315A:
ISPS INSTALLED ON SGL SEAT

Q. SEAT JUNCTION BOX DISASSEMBLY

(1) See instruction on para *B.7 CNT Armrest Disassembly* - step 6.

R. TELEPHONE BOX DISASSEMBLY

(1) Press the rear part of both tabs and raise them. Open shroud (see fig. 316).

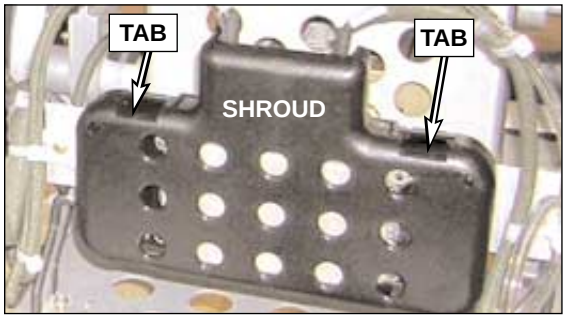

FIG. 316: SHROUD, TEL. BOX - VIEW FROM THE REAR OF THE SEAT

(2) Disconnect cables. Remove telephone box by means of two screws (A) (see fig. 316A).

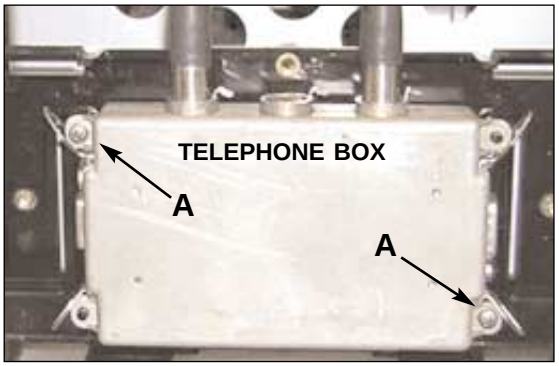

FIG. 316A: TELEPHONE BOX, VIEW FROM THE REAR OF THE SEAT

S. INTERFACE BOARD DISASSEMBLY

(1) Unplug connectors.
(2) Loose two lower screws (A) (see fig. 317).
(3) Remove Interface Board box by sliding it.

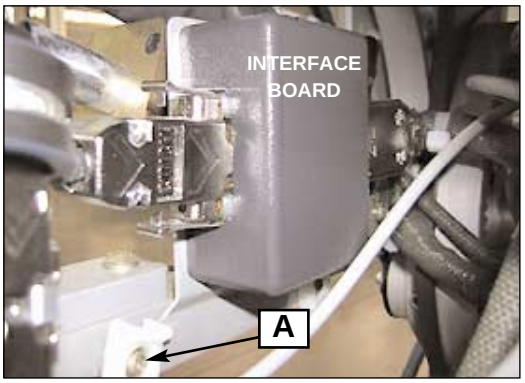

FIG. 317: INTERFACE BOARD, VIEW FROM THE REAR OF THE SEAT - INNER SIDE OF THE ENDBAY

T. LUMBAR BOX DISASSEMBLY

(1) Disconnect rubber tubes and cables.
(2) Remove four screws (A); remove lumbar box (see fig. 318, 318A).
Note: on SNG seat, telephone box must be removed before lumbar box.

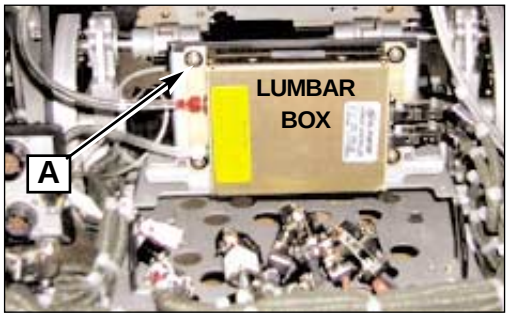

FIG. 318:
LUMBAR BOX INSTALLED ON DBL SEAT

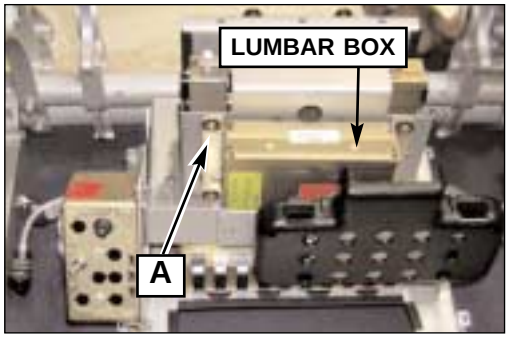

FIG. 318A:
LUMBAR BOX INSTALLED ON SNG SEAT

U. ROTARY ACTUATOR DISASSEMBLY

(1) Move the seat in full upright position. Keep this position until the completion of all operations.
(2) Disconnect actuator cable. Remove screw (A); recover it. Loose screw set (B). (see fig. 319)

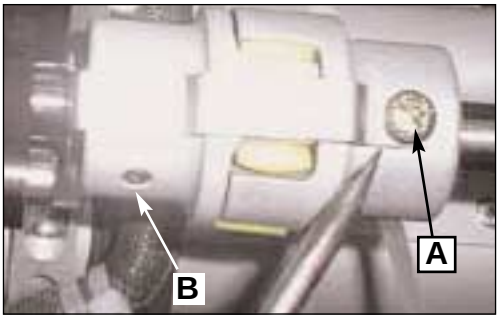

FIG. 319:
COUPLING, FRONT VIEW OF THE SEAT

(3) Separate couplings (see fig. 319A).

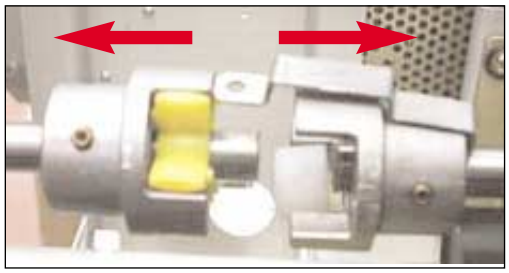

FIG. 319A:
COUPLING, FRONT VIEW OF THE SEAT

(4) Remove two bolts (C) and washers (D) (see fig. 319B).

(5) Remove rotary actuator.
Note: Before re-installing rotary actuator or installing a new one, adjustment must be done as per Chapter 2 - para D.

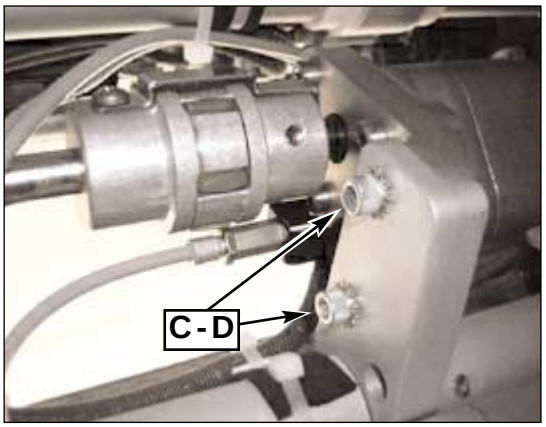

FIG. 319B:
ROTARY ACTUATOR ATTACHING BOLTS

V. SEB DISASSEMBLY

(1) Remove SEB by acting on its four nylatches (A) (see Fig. 320, 320A).

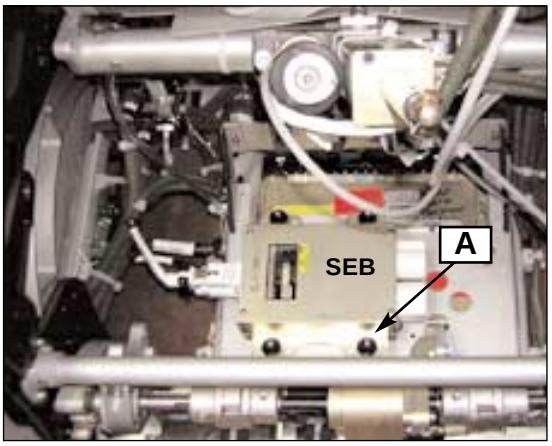

FIG. 320:
SEB INSTALLED ON DBL SEAT

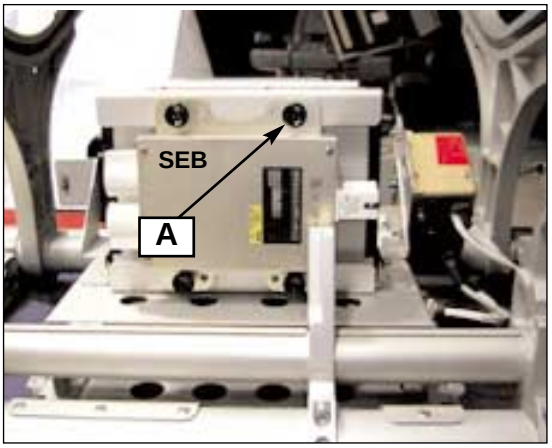

FIG. 320A:
SEB INSTALLED ON SNG SEAT

4. CLEANING

A. GENERAL

(1) Accurate cleaning is an essential prelude to any close inspection to determine existence, extent and exact location of defects.

(2) Clean by removing all padded parts and fabric cover. If padded parts cannot be removed (because bonded to the seat frame), cover the same parts before cleaning with polyethylene sheets or equivalent material so as to prevent contact with the cleaning solution.
Cleaning can be carried out without any protective measure on padded parts consisting of self-skinning foam or vinyl-skin if the surface does not show significant tears or areas in which the cellular part of the foam is visible. In this case it is better to protect that area so as to prevent contact with the cleaning solution.

B. LIST OF CLEANING AGENTS AND USAGE

USAGE	CLEANING AGENT
Upholstery	Isopropyl alcohol, grain alcohol (ethanol), wood alcohol (methanol), naphtha, white kerosene, petroleum ether, soap and water (ivory liquid soap), upholstery shampoo
Metal, dirt and grime	Soap and water (ivory liquid soap), chlorinated dry cleaning solvent
Metal, grease and oil	Hexane, isopropyl alcohol, grain alcohol (ethanol), chlorinated dry cleaning solvent
Fabric backed vinyls	Soap and water (ivory liquid soap)
Polycarbonate/ABS fairing dirt and grime	Soap and water **only**.

C. PLASTIC AND METAL COMPONENTS

(1) Clean and degrease all plastic and metal components with cleaning agents which are in compliance with contents of paragraph D.

WARNING:
•USESOLVENT TYPE CLEANING AGENTS IN A WELL VENTILATED AREA.
•AVOID BREATHING SOLVENT VAPORS AND PROLONGED SOLVENT CONTACT WITH SKIN.
•OBSERVE APPROPRIATE FIRE PRECAUTIONS.

CAUTION: DO NOT USE SOLVENT TYPE CLEANING AGENTS ON MATERIAL IN CONTACT WITH VELCRO TAPE OR FOAM CUSHION. VAPOR CLEANING OF THE SEAT IS NOT POSSIBLE BECAUSE ALL PLASTIC COMPONENTS WARP UNDER TEMPERATURE ACTION.

(2) Remove any stain or deposit on metallic parts with a detergent or polish.
(3) Dry all components with lint-free cloth or moisture free compressed air.

D.1 UPHOLSTERY CLEANING

(1) GENERAL
The following paragraphs refers to cover, FBL and curtain cleaning.

(2) CLEANING PROCEDURE

a) Involved substances:
Solvent: Perchlorethilene (boiling point 121°C).
Detergents: BC-2 Solugan; Neptune.

b) Classification and recognition of spot:
Covers must be inspected to detect those ones with spots to be pre-treated before cleaning: actually some spots can be altered during machine cleaning, so to make difficult their elimination.
The following is a general method to detect the kind of spot:

- Coffee and ink spots have a clear colour and contour;
- Wine, Coca-cola, alcoholic drinks and sweat have a shaded off extension and contour;
- Food and grease spot have a thickness;
- Fruits and blood spots are not easy to recognize and their detection is based upon operator experience.

c) PRE-TREATING

Pre-treating is recommended for spots quoted in the Table 401 and for unknown spots.

Using the reccommended detergents, follow these instructions:

- Mix BC-2 Solugan, Perchloroethilene, Water by ratio 1:0.5:0.5.
  One liter of the a.m. mix is sufficient for 30 covers.
  Put the mixture in a basin and immerse the stained portion fo the cover. Rub strongly the spotted area until characteristic dirt disappears.
  Squeeze by hand and repeat if necessary.
- Mix Neptune, Perchloroethilene, Water by ratios 1:0.5:0.5.
  One liter of the a.m. mix is sufficient for 30 covers.
  Put the cover in a basin and follow the same procedure as described before.

d) COVER PREPARATION

Velcro tapes must be protected to avoid damages to closure system.

e) MACHINE PREPARATION

At least once a day the following operations must be performed:

1) regenerate perchloroethilene by distillation;
2) add pure additive to perchloroethilene by ratio 1:100 directly in the reservoir.

f) MACHINE CLEANING

Before loading machine with covers, add one of the following additives to

the perchlorethylene, directly in the cleaning receptacle of the machine:

1) BC-2 Solugan: mix additive, alcohol, water by ratio 1:0.5:1.
   1.5 liters of mix is sufficient for 40 Kg of covers.
2) Neptune: mix additive, alcohol, water by ratio 1:0.5:1
   1.5 liters of mix is sufficient for 20 Kg of covers.

NOTE: THE ADDITIVE ADDED IN THE CLEANING RECEPTACLE OF THE MACHINE MUST BE THE SAME USED FOR PRE-TREATING

- Before loading covers, allow the perchloroethilene and mix 1) or 2) to come in deep contact to facilitate the dispersion of the additive in the solvent.
- Load covers in the machine receptacle. Total weight of covers has to be not more than 80% of the allowable load of machine.
- Wash for 5 min. at room temperature.
- Centrifugate for 3 min. at a speed not higher than 500 rpm.
- Dry up at temperature not higher than 60°C.

g) CHECK AND RE-TREATING
Unload machine and discard all covers still spotted. Discarded covers must be again pre-treated as per c) and cleaned with another load of covers of the same type.
The second pre-treating must assure the spot disappears, otherwise cooking of spot make it more difficult to detach from fabric.

h) IRONING AND FINAL CHECK
Covers must be ironed and again inspected: those ones still spotted must be cleaned again.
A number indicating how many times the covers was cleaned must be reported on the label.

(3) CRITERIA
Acceptance criteria are the following:

a) dimensions must remain the same as before cleaning;

b) no mechanic damage is allowed;
c) colour must be the same as before cleaning;
d) no spot is allowed;
e) no residue of cleaning substances must be retained in the fabric.

D.2 CLEANING PROCEDURES FOR LEATHER

(1) General

For regular cleaning, simply vacuum and then take a soft cloth and wring it out in a warm soap solution - mild soap only- never detergent.
Wipe the leather using a light circular motion taking care not to soak the leather. Repeat using clean water.
What must not be done is to attempt to nourish the leather in any way. In particular the use of spray polishers, saddle soaps, waxes and so called hide products may well create a sticky surface, attracting dirt and in time causing irreversible damage.

FIG. 401: GENERAL LEATHER GUIDE

E. CLEANING AGENTS SPECIFICATION

(1) GENERAL

a) There are no limitations as far as chemical composition is concerned. Cleaning agents commercially available in three different physical states are, respectively:

Type ‘A’ : concentrated water solutions which can be used as such or diluted with water.
Type ‘B’ : water soluble powders.
Type ‘C’ : pastes or creams to be used as such.

(2) PH (acidity and alkalinity)

a) Cleaning agents should have a PH value 12, measured at 25°C with a PH meter, according to the following:
Type ‘A’ : with any degree of dilution.
Type ‘B’ :10% solution, weight.
Type ‘C’ : saturated water solution.

(3) CORROSION

a) Cleaning agents should not corrode aluminium surfaces
b) Corrosion tests should be carried out in compliance with MIL-C-25769G specification.
c) At the end of the test, gas release should not exceed 1 c.c. and weight loss of the sample should also not exceed 1 mg.
Furthermore the sample should not show pitting or dark stains.

NOTE: FOR TYPE ‘C’ PRODUCTS, THE TESTING SOLUTION SHOULD BE A SATURATED SOLUTION.

(4) CLEANING

a) The cleaning agents, tested according to MIL-C- 25769G, paragraph

4.5.11, should prove cleaning properties equal or better than those of the control product mentioned in the herein above cited MIL-C-25769G paragraph.

(5) REACTION

a) Painted Surfaces
Cleaning agents should not decrease hardness of the paint film.
The hardness decrease allowed is equal to the hardness variation of a pencil in the Hardmuth scale, measured according to MIL-C-25769G, paragraph 3.7, except when ordinary paints instead of the one specified in the above mentioned test are used.

NOTE: TYPE 'C' PRODUCTS SHOULD BE TESTED APPLYING A THIN LAYER OF PRODUCT ON HALF OF THE SAMPLE AND MEASURING THE HARDNESS AFTER 24 HOURS.

(b) Plastic Materials
The cleaning agents, tested according to MIL-C- 25769G paragraph 4.5.8., should not cause cracks or any other manifest mark of chemical etching on plastic plates. The test should be performed on the same material as the plates used in the seat, instead of on acrylic resin plates, as specified by MIL-C-25769G.

NOTE: TYPE 'C' PRODUCTS SHOULD BE TESTED APPLYING A THIN LAYER DIRECTLY ON THE SAMPLE, INSTEAD OF ON A PIECE OF COTTON AS SPECIFIED IN MIL-C-25769G.

NOTE: USE 'A' AND 'B' TYPE PRODUCTS SOAKING A WIPER OR SPONGE IN THE SOLUTION AND ENERGETICALLY RUBBING THE SEAT SURFACE. WIPE CAREFULLY WITH CLEAN CLOTH.
USUALLY IT IS NOT NECESSARY TO RINSE, EXCEPT WHEN OTHERWISE SPECIFIED IN THE INSTRUCTIONS.

TABLE 401: RECOMMENDED PRE-CLEANING AGENTS

NATURE OF THE STAIN	CLEANING SYSTEM
ALCOHOL, LIQUORS	Use shampoo and then mop with methylated spirit.
BEER	Mop with tepid water (50°C max.) with 3% methylated spirit.
BLOOD	Mop with cold water.Then shampoo and use 5% ammonia.
BUTTER, OIL, SAUCE	Mop with ethylic alcohol and perchlorethylene. Use shampoo and then 5% ammonia if stain remains.
CHEWING-GUM	Mop with acetone or perchlorethylene.
CHOCOLATE	Mop with tepid water (50°C max.) or with 5% ammonia.
COFFEE, TEA	Use shampoo or methylated spirit, or 10% ammonia if stain remains.
EGG	Mop with 5% ammonia or methylated spirit, then use shampoo.
FRUITS, FOOD	Mop with tepid water and then use shampoo.
GLUE, PAINTS	Use ethylic alcohol or perchlorethylene. Then mop with tepid water or shampoo.
GRASS, VEGETABLES	Moisten with methylated spirit.
SUGAR	Mop with tepid water. Then use shampoo.
INK, COAL	Use absorbent paper, then mop with a solution of 30% methylated spirit and 70% water. Use also lemon juice.
JUICE, JAM	Mop with tepid water (50°C max.). If stain remains, use ethylic alcohol or perchlorethylene.
MAYONNAISE KETCHUP MUSTARD	Use 10% ammonia and perchlorethylene. Then use shampoo.
MILK, CREAM, ICE CREAM	Use shampoo, then mop with 5% ammonia or perchlorethylene.
MUD	Let dry up, then use vacuum-cleaner.
SHOE POLISH, FLOOR WAX	Use ethylic alcohol or perchlorethylene. If stain remains, use 5% ammonia or methylated spirit.
TAR	Mop with methylated spirit or perchlorethylene, then use shampoo.
VOMIT, URINE ORDURES	Mop with water and 50% vinegar or methylated spirit.Then, use shampoo.
WATER	Absorb with a cleaned cloth and let it dry up. Use shampoo or alcohol on eventual rings.
WAX, PARAFFIIN	Put on the seat absorbent paper and iron it. Mop with perchlorethylene. Then use shampoo.
WINE, DRINKS	Use a solution of 50% vinegar, then shampoo.

5. INSPECTION CHECK

A. GENERAL

(1) Check by visual inspection structural assemblies, riveted and/or welded, subjected to mechanical stress, metal wear or cracking.
(2) Use a strong light and preferable a magnifier to check structural points.

B. INSPECTION CHECK

B.1 POST-FLIGHT CHECK

(1) Check seat track fitings.
(2) Check all upholstery surfaces and assemblies for appearances, condition of fabric.
(3) Check IAT table for operation.
(4) Check life vest pocket opening condition.

B.2 EVERY 500 HOURS CHECK

Besides post-flight checks, perform also the following:
(1) Lubricate in-arm-table hinges by using silicon oil. Remove the exceeding with cloth.
(2) Check alignment of IAT table. For adjustment, see *Chapter 2, para I, on page 245.*

B.3. EVERY 1000 HOURS CHECK

Besides post-flight and 500-hours checks, perform the following ones:
(1) Backrest structure: check for pan cracks
(2) Bottom structure: check for pan cracks

B.4 EVERY 2000 HOURS CHECK

Seat reassembly and adjustment of its parts precludes additional checks. However, before any disassembly or after any important repair, perform the following checks:

(1) Check sewn for fraying or separation.
(2) Check all upholstery surfaces and assemblies for appearances, condition of fabric, especially noting looseness, frayed edges, open seams and correct alignment of “Velcro” tape fastener covers.
(3) Check plastic components for cracks, chipping, de-lamination, breakage and burns.
(4) Check washer, bolts, nuts, pins, screws, seals, springs, and floorattaching studs for: wear, abrasion, sign of perishing, loss of elasticity, deformation and so on.
(5) Check all threaded parts for cross threading or stripping. Reject parts if thread damage exceeds 50% of one thread.
NOTE: IF DAMAGE TO ONE THREAD IS 50% OR LESS, NOTE DEFECT AND ASSIGN PART FOR REPAIR.
(6) Check structural components for denting, distortion evidence of wear, cracks, nicks, corrosion by using non destructive test methods.
(7) Check all metal parts for cracks, burrs and corrosion.
(8) Check all mounting holes for elongation, wear and cracks.
(9) Check for rigidity of mounting and over all appearance.
(10) Check all placards are properly attached on the seat structure.
(11) Check following seat operations for correct action and freedom of motion:
a) lie flat position
b) armrest movement
c) legrest movement
d) backrest movement
e) seat pan movement

NOTE: INSPECTION OF RECLINE LOCK AND CONTROLS WILL BE A VISUAL AND FUNCTIONAL INSPECTION ONLY. REFER TO THE MANUFACTURER INSTRUCTION FOR DETAILED INSPECTIONS, TEST AND OVERHAUL PRO CEDURES.

C. MAINTENANCE

(1) SEAT CUSHION

The wear and the damage to the seat cushions are caused by normal usage and they can be accelerated by excessive usage or cleaning. The main issues that can happen are abrasion of the cover and loss of elasticity of the foam. Due to the variety and the frequency of the usage and cleaning, is recommended to replace the seat cushions within the period listed in table 501.

TABLE 501: RECOMMENDED LIFE

DESCRIPTION	RECOMMENDED LIFE
Cushion, cover	either 10.000 flight hours or 20 dry cleanings (whichever occurs first)
Foam	10.000 flight hours

NOTE: LIFE IS INTENDED FOR A NORMAL USE. IT SHOULD BE INCREASED OR DECREASED ACCORDING TO AIRCRAFT DUTY.

If on the cushions cover or on the fire blocking layer there are small rips or tears, it is recommended to replace the seat cushion for it could be not resistent to the fire.

(2) SAFETY BELT WEBBING LIFE

Nylon and Polyester Webbing, used in Am-Safe Restraint Systems, will degrade over time with exposure to the elements (sun, atmoshere and high temperatures). Due to the variety and intensity of environmental conditions that could pertain to a given apllication, Am-Safe recommends, for typical weather protected installations, the Restraint System Webbing be replaced within a seven year service period. This assumes that only minor amount of web fray exists, measuring no more than 3 mm on each side of the webbing or 6 mm on one side only.

Textile components are to be checked for damaged stiching, injurious marks, broken fabric threads, chafe marks and fusing. Slight wear and roughening of the webbing caused by the jamming action of the buckle may be ignored. Cut or worn edges, however, make the straps unserviceable.

NOTE:

During complete overhaul it is recommended to perform all checks previously described (every 500, 1000 and 2000 hours).

6. REPAIR

A. GENERAL

(1) Use appropriate needle and nylon thread to stitch open seams on upholstery. Replace torn or frayed covers.

(2) Replace all the screws, bolts, washers and nuts, removed during the overhauls, regardless of their apparent condition.

(3) Refer to table 601 for repair materials.

B. RIVETS REPLACEMENT

Rivets replacement may be accomplished at overhaul level.

SEAT STRUCTURE
- No hole elongation is possible.
- When rivets get loose or miss their retaining rings, replacement must be accomplished according to the following instructions:

CHEESE-HEAD RIVET REMOVAL

(a) Drill rivet out with a drill smaller than rivet diameter.

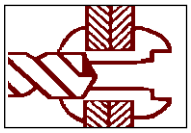

(b) Break off rivet head by using a drift tool

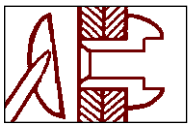

(c) Remove the remaining rivet by using a pin with diameter equal to the rivet shank.

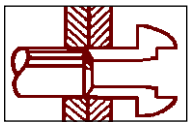

FLUSH-HEAD RIVET REMOVAL

a) Drill rivet out with a drill dia equal to the rivet shank.

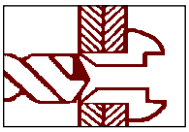

b) Remove the remaining rivet by using a pin with dia. equal to the rivet shank.

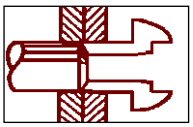

OTHER RIVETS

Hole limitations for drilling the rivets out must be controlled by standard shop practices for oversize rivets.

C. HOLE REPAIR

(1) Threaded holes on which parts subjected to frequent disassembly are installed, are fitted with helicoil .

(2) For helicoil installation see NASM8846.

(3) Helicoil replacement on existing helicoiled threads is a practice not recommended.

(4) Welding shall be accomplished according to SAE-AMS-W-6858.
If any doubt exists regarding the penetration of the weld into the welded part, use the radiographic method according to ASTM E1742-00.

D. VELCRO TAPE REMOVAL AND REPLACEMENT

(1) The seat bottoms and cushion covers are fastened by Velcro Tape.

(2) Velcro Tape is also fastened to the structure by means of rivets and cement.

(3) If Velcro tape fastened to structure requires to be replaced, drill the rivets out (refer to para. B), remove entire piece of velcro, clean the exposed surface (refer to chapter 4 - *Cleaning*) and wipe dry with clean cotton cloth.

(4) Coat metal surface and Velcro tape with cement (Refer to table 601), allow air drying, and then fasten.
Press tape to metal and hold briefly to ensure a good bond along the entire length of the tape.

(5) Replace loosened or removed Velcro tape on upholstery fabric by sewing with nylon thread colour matching to fabric, and by using appropriate needle.

E. HONEYCOMB PANELS REPAIRING INSTRUCTIONS

Repair to this type of panel should normally be performed, where the cost of the proposed reapir does not exceed 35% of the cost of a replacement panel. Repairs of a temporary nature should be avoided, as in the case of delamina tion, if this is not effectively repaired when first located, it could then propaga te during further service and become unsuitable for economical repair.

SUPERFICIAL DAMAGE

Small areas of damage to the top skin of a laminate may be re repaired by tho roughly cleaning the area affected and abrading to provide a key for the adhe sive. The area may be filled with an epoxy resin.

MATERIAL DESCRIPTION

The panels consist of a honeycomb core and of a phenolic glassresin skin. The skin of the visible part is covered by a thermoplastic film on which the fini shing paint is applied.

DEFINITION

In a sandwich panel we define a structural damage the destruction of one or more parts which may cause total breakage of the structure.

MATERIALS

Use the following material and no other product:

- Phenolic laminate
  Note: core BMS8-124 CL4 TY6 GR3 size 0.62 and fabric BMS9-3 TY H2 CL7 can be used as alternative.
- Redux 411 (Ciba-Geigy)
  Note: Resin BMS8-201 TY2 50A can abe used as alternative.

TOOLS

- Emery paper or equivalent abrasive materials
- hand cutter
- drilling machine
- vacuum system (pump, bag, air breather and sealant)
- oven or chamber mainteined at 60° for the curing of the adhesive

PROCEDURE FOR THE CRACK REPAIR (Fig. 3. 2)

1) Sand down the surface around the crack with Emery paper and degrea se it with MEK (Methyl Ketone or equivalent solvent)

2) Cut a piece of glass phenolic laminate so that its dimensions will be 30 mm wider and 30 mm longer than the crack length.

3) Sand down and degrease the inner face glass phenolic laminate

4) Apply uniformly a film of Redux 411, about 0.1 mm thick, around the crack on a surface area corresponding to the laminate dimensions.

5) Apply the piece laminate on the adhesive with the warp of the laminate glass fabric parallel to the warp of the panel glass fabric.

6) Place the vacuum equipment as shown fig.3.1

7) Create the vacuum in the bag so that the atmospheric pressure will flat ten the laminate against the damaged zone.

8) Seal the system by closing the tap and remove the vacuum pump.

9) Ensure that there is no leakage

10) Maintain a temperature of 60° around the repaired zone for at least

11) Remove bag and sealant.

PROCEDURE FOR THE IMPACT DAMAGE REPAIR (FIG. 3.3)

1) Drill a hole with a diameter 15 larger than the diam. of the damaged zone.

2) Fill the hole with the edge filling ALEXIS FST 495-14 and 491-14

3) After at least 24 hours, sand down and degrease the surface around the repaired zone.

4) Cut a piece of glass phenolic laminate so that its dimensions will be 30 mm bigger than the hole dimensions.

5) Apply a film of redux 411, about 0.1 thick, on the sanded surface.

6) Apply the piece of laminate on the pasted area with the warp of the laminate glass fabric parallel to the warp of the panel glass fabric.

7) Place the vacuum equipment as shown in fig.3.1

8) Create the vacuum in the bag so that the atmospheric pressure will flat ten the laminate against the damaged zone.

9) Seal the system by closing the tap and remove the vacuum pump.

10) Ensure that there is no leakage

11) Maintain a temperature of 60° around the repaired zone for at least 16 hours.

12) Remove bag and sealant.

FIG. 3.1 VACUM SYSTEM PLACEMENT

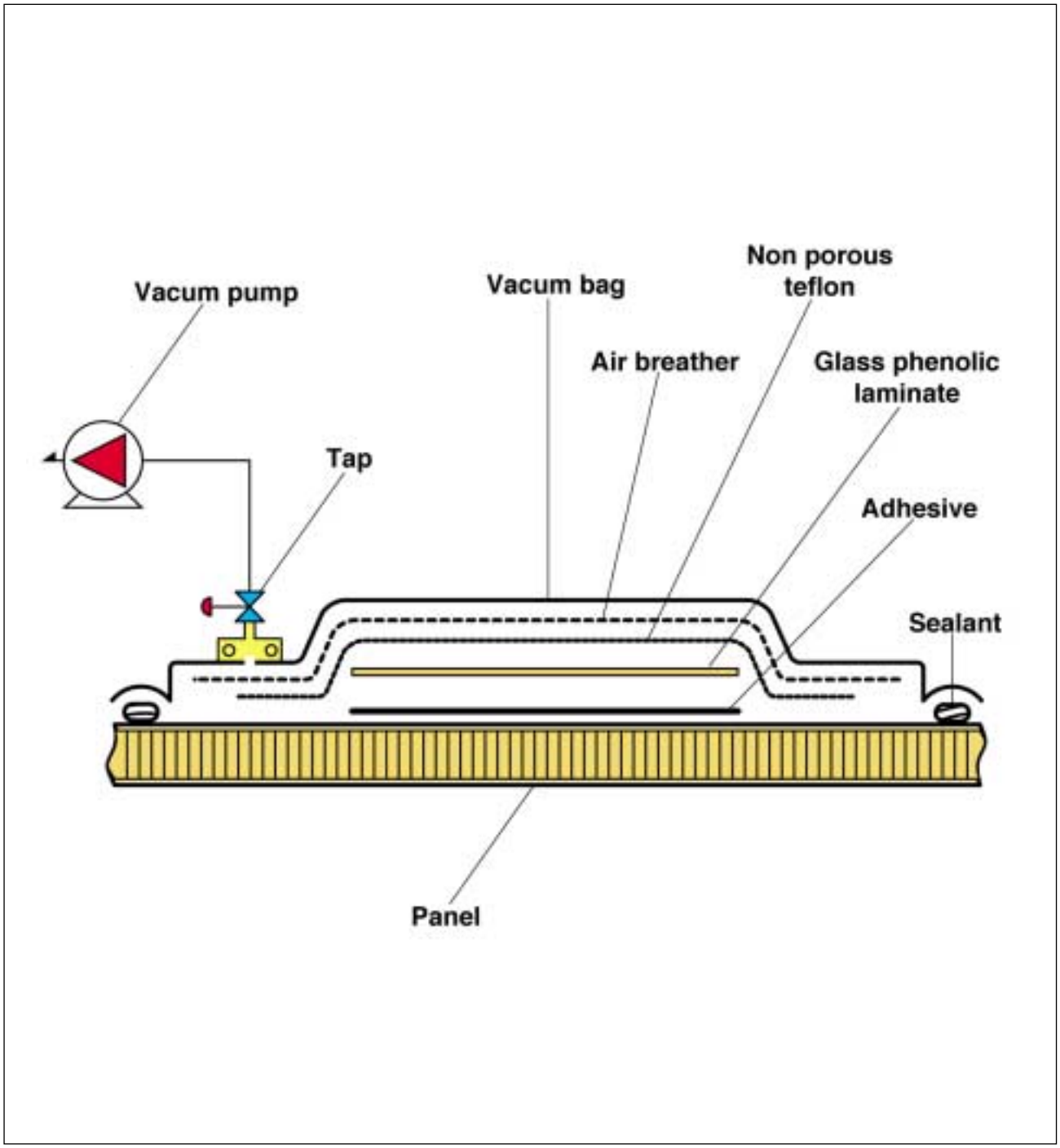

FIG. 3.2 CRACK REPAIR

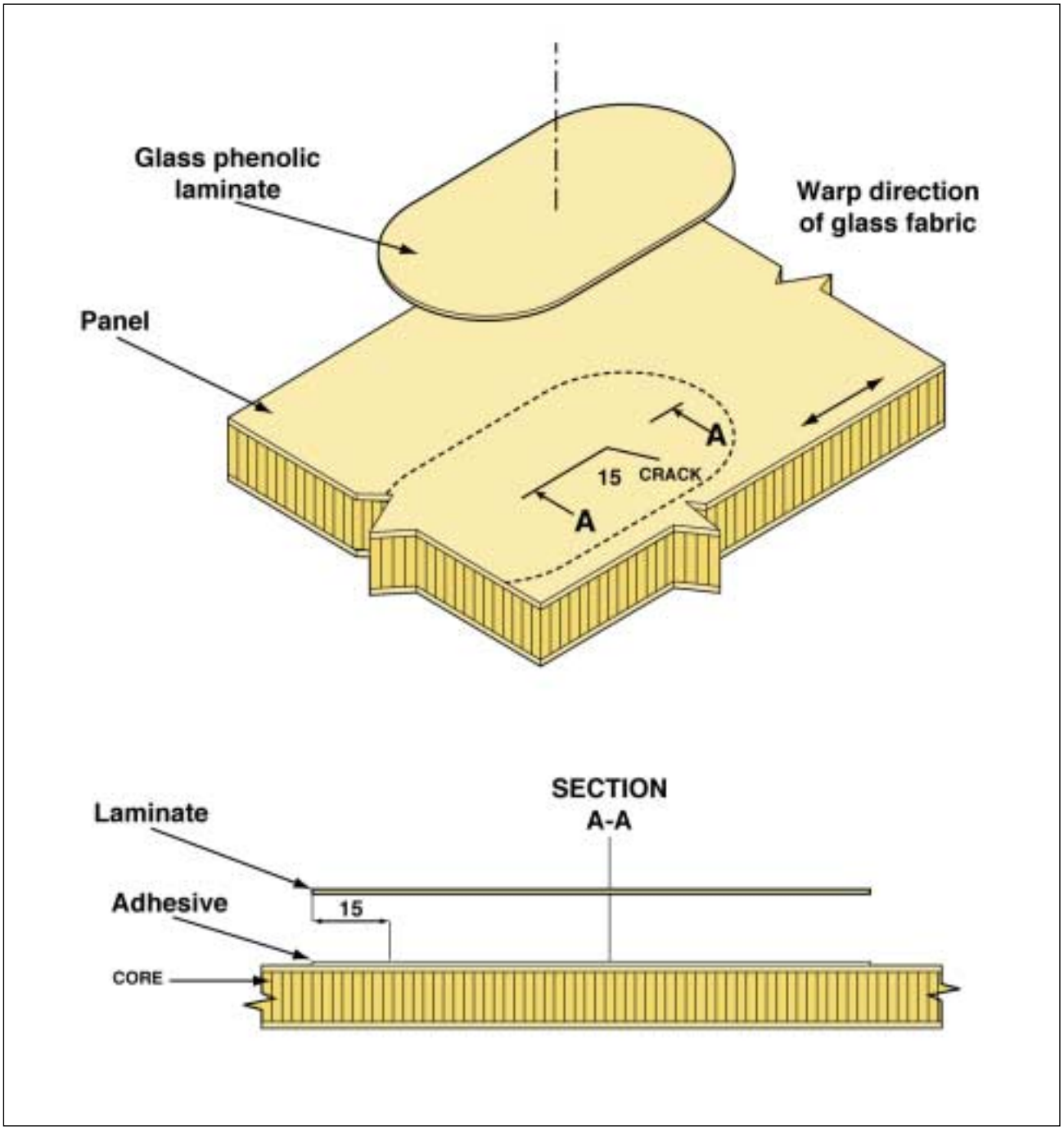

FIG. 3.3 IMPACT DAMAGE REPAIR

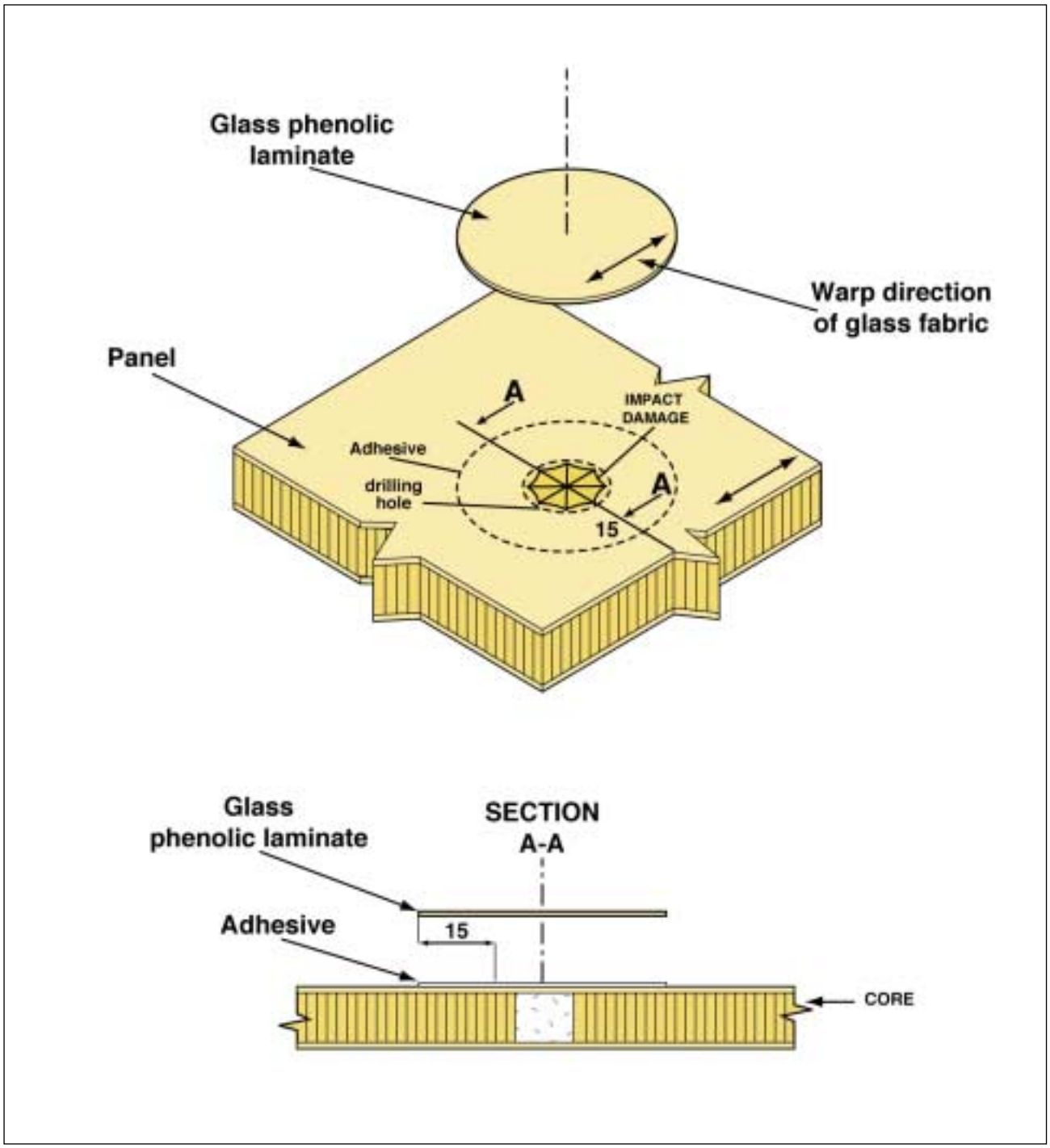

F. ELECTRICAL SYSTEM REPAIR

1. MATSUSHITA IFE SYSTEM

(a) APPLICABILITY
All aircraft seats equipped with MASC IFE system.

(b) REFERENCE
Seat Equipment Interface and Installation Requirements EDP 1004

2. GENERAL DYNAMICS ISPS

(a) APPLICABILITY
All aircraft seats equipped with AC ISPS.

(b) REFERENCE
EKE -02/01/98 Requirement for Seat Installation of SKI Power Components.

3. GTE TELEPHONE BOX/ HANDSET

(a) APPLICABILITY
All aircraft seats equipped with telephone.

(b) REFERENCE
Design Criteria Seatback/Console Doc. n° AFD70-0060-00

4. INSTALLATION REQUIREMENTS

In order to prevent damage to the harness it is important to first insure that the cables are properly installed and routed. Here are a few of the key points to consider when installing cable onto the seat assembly.

(a) Protect harnesses from rubbing or chafing on structure by providing pro per routing and clamping per applicable OEM procedures (Technical standard pratices chapter 20).

(b) Provide a service loop in arm to allow flexing at the arm hinge area per appli cable OEM procedures.

(c) Install grommets on all holes and cutouts per applicable OEM procedures.

5. REPAIRING HARNESSES

Outer cable jacket damage

(a) A cable will consist of a group of individual wires twisted together with an outer jacket. A harness assembly consists of one or more cables attached to connectors.

(b) It is generally acceptable to install sleeving over a damaged cable jacket. In order to prevent the damage from occurring one should address the instal lation. Adding sleeving will not prevent damage from occurring, but will only postpone the damage if harnesses are not installed per the referenced instal lation requirements guidelines.

(c) If a repair to the outer cable jacket is required examples of acceptable cable sleeving are listed below.

1. Expando sleeving - FLEX-GUARD FPE 1/4"ID black from Alta.
2. Heat shrink - NT-FR from Raychem.

6. WIRE INSULATION DAMAGE

If individual wires within a harness are damaged the harness should be replaced with one that complies with the original manufacturing drawings. In the event a replacement harness is not available temporary repair gui delines are outlined below:

NOTE :FAA AC 43 13-1 allows for splicing damaged wires where the application is considered suitable for intermin repair. However, based on the moving parts of the seats and the area of damage to the harness, splices should only be used as a temporary repair. Harnesses should be replaced as soon as possible.

When using splices, the following should be considered:

(1) Remove damaged area and add splice.

(2) Splicas should be staggered.

(3) Cutting a wire and splicing it must not cause the rest of the harness to deform or balloon. Avoid stress on the repaired wires.

(4) Only one splice should be used per conductor.

(5) When replacing individual damaged wire. Use M22759/18-24-(match existing color) or M16878/6-24 (match existing color).

(6) After wires have been spliced and inspected, sleeving shall be added over the exposed area of the harness for protection.

Splices are not allowed in the following areas:

(1) In bundles with curved of flex portions.
(2) Inside condults or sleeves.
(3) Under clamps cable ties or other supports.
(4) Inside connector backshells.

Types of splices, moisture resistant.

(1) D-1744-01 Raychem
(2) D-436-36 Raychem MIL-S-81824/1

Types of splices, not moisture resistant.

(1) M7928/5-1
(2) M7928/6-1

7. ASSEMBLY AND STORAGE INSTRUCTIONS

A. GENERAL

(1) Accomplish replacement of damaged or worn parts of seat assembly using standard shop practices and following the detailed instructions.

(2) Refer to exploded view illustrations in the IPL for location, quantity and identification of all detailed parts and subassemblies. In general, assembly is essentially the reverse procedures of disassembly; note that attaching parts are listed following the item they attach.

(3) As an overhaul aid, a frame or fixture to simulate the mounting provisions in the airplane is recommended.

B. ASSEMBLY

(1) Assembly is the reverse of diassembly. Refer to Chapter 3 - Disassembly (see also IPL and relevant figures).

C. STORAGE INSTRUCTIONS

(1) General
The seat assembly is made of corrosion resistant materials. Therefore no special products are required for its preservation during storage.

(2) Packaging
a) Wrap seat assemblies in waterproof wrapping paper (Federal Specification PPP-B-1055A) or equivalent. Seal all edges and seams with reinforced sealing tape (Federal Specification PPP-T-76B), or equivalent.
b) Identify packaged seat assemblies by writing the seat assy part numbers, serial number and overhaul date on the wrapper or on a tag.
c) Store packaged seat assemblies in a cool dry area, away from direct sunlight and heat sources.

8. FITS AND CLEARANCES

A. GENERAL

(1) All bolts and screws of the seat structure must be tight according to the following torque values that must be used in assembly.

a) 7.9 +/-0.7 foot-pound or 1,1+/-0,1 Kg meters for 1/4” 28 bolts.

9. SPECIAL TOOLS, FIXTURES AND EQUIPMENTS

A. GENERAL

No special fixture is required for maiintenance or overhaul work of the seat. However, a fixture simulating aircraft seat track location is recommended for exten sive seat maintenance carried out outside the aircraft.

B. SPECIAL EQUIPMENT

(1) A wrench sector (diam 34-36 mm or 1 1/2”) is used to tight the anti-rattling ring-nut on the fwd fitting assy of the leg (See Fig. 901).

FIG. 901 : KIT FORWARD STUD

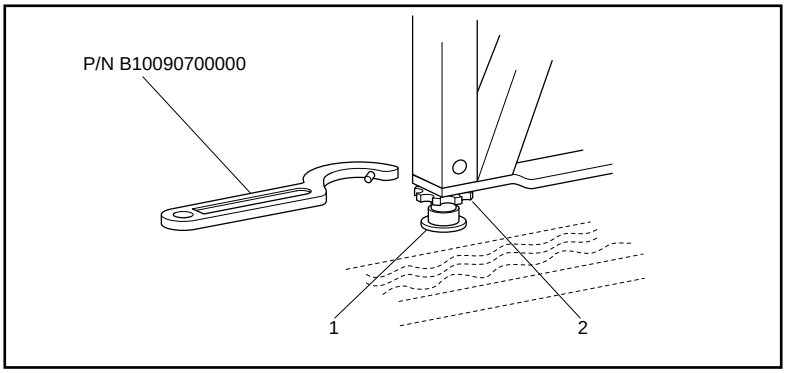

NOTE: 1 = Stud 2 = Anti-rattling device

(2) Aft track fitting protection P/N B20009000000 (A) and fwd stud protection P/N B20008900000 (B) (see Fig. 902)

FIG. 902 : AFT TRACK FITTING/FWD STUD PROTECTIONS

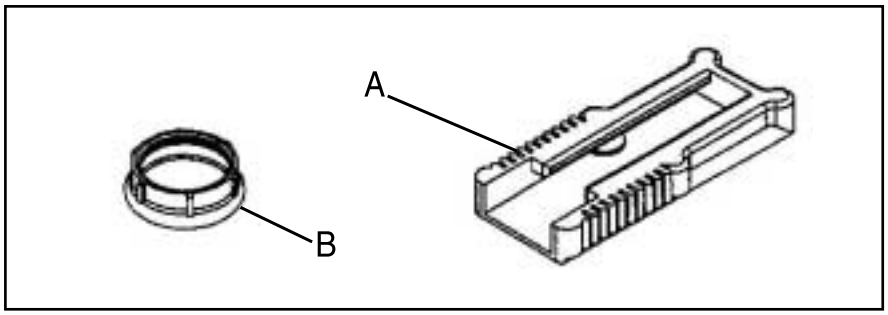

ILLUSTRATED PARTS LIST

1. GENERAL

A. The Illustrated Parts List is intended for use in provisioning, storing, issuing of replaceable parts and in identification of new parts.

B. The Illustrated Part List does not list illustrated parts which lose their identity by being permanently welded or riveted to other pieces (except special cases).

2. ILLUSTRATED PART LIST ARRANGEMENT

A. Each assembly listed is followed immediately by a listing of its components parts, properly indented, to show their relationship to the assembly. Parts are listed in general order of disassembly, with the exception of attaching parts which are listed immediately following the item they attach, and precede the components, if any, of that assembly. The symbol "* * *" is used to separate the attaching parts from the parts which follow.

B. Quantities specified in the "UNIT PER ASSY" column are the total number of each part required per assembly or subassembly and are not necessarily the total used for the complete equipment. Refer to the Alpha-Numerical Index for total quantities required.

C. Abbreviations used in the “Illustrated Parts List” are the following:

AR	As Required	LH	Left Hand
ASSY	Assembly	NHA	Next Higher Assembly
BAG	Baggage bar	NP	Not Procurable
BKDN	Breakdown	NRW	Narrow
BO	Break Over	OUTBD	Outboard
CNT	Center	QTPL	Quadruple Seat
DBL	Double Seat	RECL	Recline
DP	Disable People	RF	Reference
FIG	Figure	RH	Right Hand
IAT	In Arm Table	RQ	Requirement
INBD	Inboard	STD	Standard
INSTL	Installation	STRUC	Structure
IPL	Illustrated Part List	TPL	Triple Seat

D. Parts purchased from other manufacturers and used without alteration are listed in the Illustrated Parts List under the part-number of the original manufacturer. The name of the original manufacturer is indicated by a numerical code symbol in brackets following the description of the parts. These code symbols are the Federal Identification Numbers listed in the Federal Cataloguing Handbook H4 - 1 and consist of the applicable code symbol preceded by letter “V”. Except for standard parts, the absence of a code or contractor’s name and the address following a part description, indicates that the item is a part number of AVIOINTERIORS. The code symbols used in the “Illustrated Part List” are numerically listed below:

CODE	VENDOR NAME AND ADDRESS
V02953	PORTER P.L. Co. 2435 Military Ave. Los Angeles, CA 90000

E. Effective usage is indicated in the “EFFECT - FROM - TO” column and applies to each individual figure only. The code used for the assembly or to indenture one item will be used for all detail parts or assemblies effective for that assembly. The code appears opposite the first line of an item and is applicable to all lines of a multiple line item. The code, if applicable for more than one assembly, will be shown in same cases with a dash “ - “ to indicate “through”, for example, A-D would indicate A through D, or A,B,C and D. A blank effectivity code will indicate a part's complete interchangeability relationship within all assemblys for that figure.

3. NUMERICAL PARTS LIST INDEX ARRANGEMENT

A. All parts in the Parts List are listed in the Numerical Parts List index and are arranged in alpha-numeric order. “No number” parts are listed in alphabetical order preceding the numbered parts. The letter “O” is treated as the numerical “0”.
All parts are listed with reference to figure and item numbers indicating the location(s) of each part application.

4. USE OF THE ILLUSTRATED PARTS LIST

A. When the Part Number is not known. Look through the exploded view illustration and identify the parts by appearance. Note the item number in the exploded view and check the corresponding item number with accompanying parts list to find the part number, description and quantity for that application.

B. When the Part Number is known. Turn to the Numerical Index and locate the part number. Figure and item number of the Illustration where the part appears are listed in the column to the right of the part number. Turn to the illustration and locate the item number. The corresponding item number in the acompanying parts list will give number, description, assembly relationship and quantity required for that particular application.

PART NUMBER	FIG.	ITEM	REQ	PART NUMBER	FIG.	ITEM	REQ
1068-2	1A	1200	1	3126676G00QQ	3	-640	1
1068-2	1	1370	1	''	3A	-710	1
1068805-5-24	1	-1390	2	3126676H00QQ	3	-680	1
''	1A	-1220	1	''	3A	-750	1
1068806-1-44	1	-1420	1	''	3B	-870	1
1068806-1-52	1	-1410	1	''	4	-150	1
''	1A	-1240	1	3126676L00QQ	3	-720	1
1068820-2	1A	1210	1	''	3A	-790	1
1068820-2	1	1380	1	312679600000	5	760	1
1075-2-2	1	1400	2	3127217A0000	3A	210	1
''	1A	1230	1	3127220A0000	3A	40	1
1113852	1A	700	1	3127220C0000	3	50	1
1113852	1	860	2	3127245C0000	3	182	1
12523-0101ZA	1	-10	2	3127246C0000	3	-182A	1
''	1A	-10	1	3127250C0000	3	186	2
12523-0201ZA	2	-10	1	''	3A	440	2
12523-0301ZA	2	-40	1	3127271E00ZA	3	290	1
12523-0401ZA	7	-310	1	''	3A	-630A	1
16NC1T1208ZA	1	1	RF	3127272E00ZA	3	-290A	1
16NC1T1209ZA	1	-1A	RF	''	3A	630	1
16NC2T0110ZA	1A	1	RF	3127295C0000	3A	-170A	1
192-5174	3	-1140	4	3127296C0000	3A	170	1
''	3A	-1300	4	3127300A0000	3A	30	1
2011-1-5????	1	-490	2	3127301A0000	3A	-30A	1
201115962289	1A	-410	1	3127306C0000	3A	-370	1
22NKM02	10	110	1	3127307C0000	3A	-370A	1
311396100000	6	100	1	3127308E0000	3A	-360	1
31195910002A	3B	-1050	1	3127309E0000	3A	-360A	1
''	4	-460	2	312747700000	8	310	2
312410900000	6	40	2	''	8A	310	1
3124580F0000	1	-920	5	312758600000	8	90	2
''	1A	-830	4	''	8A	90	1
3124580J0000	1	-930	1	312758700001	8	-100	2
3125357E0017	8	560	2	''	8A	-100	1
''	8A	-560	2	312758800001	8	-100A	2
''	10	-130	1	''	8A	-100A	1
3125926A0000	7	-680	1	312758900001	8	-190	2
312628600000	1	-690	2	''	8A	-190	1
''	1A	-600	1	312759000001	8	-190A	2
3126676F00QQ	3	-600	1	''	8A	-190A	1
''	3A	-670	1	3127592L002P	8	510	2

- Item not illustrated

PART NUMBER	FIG.	ITEM	REQ
''	8A	510	1
312761600000	2	150	1
31276170002A	2	-90	1
3127620E00ZA	1	-140A	2
''	7	1	RF
3127621E00ZA	1	140	2
''	1A	110	1
''	7	-1A	RF
312762200000	7	420	1
312762300000	7	430	1
3127624C0000	7	-400	1
312762500000	7	290	1
312762700000	7	160	1
312762900000	8	500	2
''	8A	500	1
312763200000	7	250	1
312763300000	7	260	1
3127638C0000	7	410	1
312765000001	11	20	1
312765100001	11	30	1
312765200000	11	-130	1
312765300001	11	-10	1
312765400001	11	-10A	1
312765500000	9	20	1
312765800000	5	750	1
3127660A0000	11	-300	1
3127661A0000	11	-300A	1
312768400017	10	160	1
312773100000	3	-430	1
312773200000	3	-430A	1
3127733A0000	3A	-160A	1
3127734A0000	3A	-160	1
312774700000	3	440	1
3127747E0000	3	450	1
312774800000	3	-440A	1
3127748E0000	3	-450A	1
312780100000	8	-240	2
''	8A	-240	1
3127847A0000	8	550	2
''	8A	550	2
''	10	1	RF
31278480002A	5	-30A	1
31278490002A	5	30	1
31278500002A	3	-300A	1
31278510002A	3	300	1
3127894A0000	11	-170	1
312789700000	11	200	2
31279150008A	7	370	1
3127925C00ZA	7	330	1
3127926C00ZA	7	340	1
3127927C00ZA	7	350	1
3127930E0000	7	10	1
3127931F0000	7	-20	1
312830300000	3B	1340	1
''	4	730	2
3128310C0000	3B	340	1
3128410A0000	3A	380	1
3128411A0000	3A	-380A	1
3128440L0001	8	-230	2
''	8A	-230	1
3128441C0001	8	-280	2
''	8A	-280	1
3128442C0001	8	-280A	2
''	8A	-280A	1
3128455C0001	8	300	2
''	8A	300	1
3128456C0001	8	290	2
''	8A	290	1
31284790002A	5	770	2
3128508A0000	10	10	1
312850900000	8	70	2
''	8A	70	1
312851000000	8	80	2
''	8A	80	1
31288790002A	1	300	1
31288800002A	1	-300A	1
''	1A	-170A	1
312896500000	2A	40	2
3129115M00ZA	1	160	2
''	1A	130	1
312916400000	6	-90A	1
312916500000	6	90	1

- Item not illustrated

PART NUMBER	FIG.	ITEM	REQ	PART NUMBER	FIG.	ITEM	REQ
312918500000	3B	440	1	''	4	85	1
''	4A	70	1	3129539C00ZA	4	80	1
3129223A0000	8	790	4	312954200000	3B	680	1
''	8A	790	2	''	4A	440	1
312923700000	2	100	1	312954300000	3B	720	1
312930200000	8	20	2	''	4A	330	1
''	8A	20	1	312954400000	3B	550	2
312930300000	8	30	2	''	4A	300	2
''	8A	30	1	312954500000	3B	610	1
312930400000	8	-10	2	''	4A	410	1
''	8A	-10	1	312954600000	4A	-410A	1
312930500000	8	-10A	2	312954700000	3B	570	1
''	8A	-10A	1	''	4A	370	1
312935000000	9	10	1	312954800000	4A	-370A	1
312935100000	9	-10A	1	3129552A0000	3B	740	1
3129488C0000	8	1060	1	''	4A	160	1
312951600000	3B	310	1	3129564A0000	3B	50	1
31295170002A	4A	20	1	''	4	40	2
31295180002A	4A	10	1	31295970002P	4	480	1
3129518A002A	3B	260	1	3129607A002A	6	-10	1
31295190002A	4	140	1	3129608A002A	6	-10A	1
31295200002A	3B	930	1	31296120002A	6	-20A	1
''	4	145	1	31296130002A	6	20	1
3129522F0000	3B	-300	1	3129710E0000	3	-20A	1
3129523M00ZA	4	-60	1	3129710F0000	3	-20B	1
3129524M00ZA	4	-60A	1	3129711E0000	3	20	1
3129524N00ZA	3B	-240	1	312995000000	3B	-460	1
31295250002P	4A	-50A	1	''	4A	-120	1
31295260002P	4A	-50	1	312995100000	4A	-120A	1
3129527L0000	4A	40	1	3130833C00ZA	5	330	2
3129528F0000	3B	-290	1	31308340002P	5	-350	2
3129528L0000	4A	30	1	3131362A008A	1	420	1
3129531M00ZA	4	70	1	3131363A008A	1	-420A	1
''	4A	-1A	RF	3131364C0000	1	430	1
3129532L00ZA	4	75	1	3131365C0000	1	-430A	1
''	4A	1	RF	313136600000	3	120	1
3129532M00ZA	3B	-250	1	313136700000	3	130	1
312953300000	3B	450	1	3131715A002A	1A	150	1
''	4A	60	1	313199700000	3B	540	1
312953400000	4A	-60A	1	''	4A	230	1
3129538C00ZA	3B	970	1	3131998A0000	3B	-530	1

- Item not illustrated

PART NUMBER	FIG.	ITEM	REQ	PART NUMBER	FIG.	ITEM	REQ
''	4A	-150	1	3132429A00ZA	1	-50A	1
3131999A0000	4A	-150A	1	''	3A	-1A	RF
313200000000	4A	-360A	1	3132430A00ZA	1	50	1
313200100000	3B	-560	1	''	3A	1	RF
''	4A	-360	1	3132431A0000	3A	-140A	1
313200200000	4A	-400A	1	3132432A0000	3A	-140	1
313200300000	3B	-600	1	3132433A00ZA	3A	-340A	1
''	4A	-400	1	3132434A00ZA	3A	-340	1
313200500000	3B	580	1	31324350002A	3A	-10A	1
''	4A	380	1	31324360002A	3A	-10	1
313200600000	3B	800	1	3132437A0000	3	420	1
''	4A	260	1	''	3A	-150A	1
313216000001	3	-1100	7	3132438A0000	3	-420A	1
''	3A	-1260	5	''	3A	150	1
31323010002A	3	200	1	313243900000	2	20	1
31323020002A	3	-200A	1	31324400002A	1	20	2
3132409A00ZA	3	1060	1	''	1A	20	1
''	3A	-1220A	1	31324580002A	3A	20	1
3132410A00ZA	3	-1060A	1	31324590002A	3A	-20A	1
''	3A	1220	1	3132460A00ZA	3	-370A	1
3132411A00ZA	3A	-1240A	1	''	3A	-590	1
3132412A00ZA	3A	1240	1	3132461A00ZA	3	-370	1
3132413A00ZA	3	1080	1	''	3A	-590A	1
3132414A00ZA	3	-1080A	1	3132462A00ZA	3A	-350	1
31324150002A	3	1070	1	3132463A00ZA	3A	-350A	1
''	3A	1230	1	3132464A00ZA	3A	500	1
3132417A00ZA	1	890	1	3132465A00ZA	3A	-500A	1
''	3	-1050	1	31324680002A	3A	490	1
3132418A00ZA	1	-890A	1	31324690002A	3A	-490A	1
''	1A	800	1	313247100000	3	184	1
''	3	-1050A	1	''	3A	-430A	1
3132419A00ZA	1	-900A	1	313247200000	3	-184A	1
''	3A	-1210A	1	''	3A	430	1
3132420A00ZA	1	900	1	3132473A00ZA	1	40	1
''	3A	-1210	1	''	3	1	RF
3132421A002A	3	30	1	3132474A00ZA	1	-40A	1
3132422A002A	3	-30A	1	''	3	-1A	RF
3132422C002A	3	-30B	1	3132474C00ZA	1A	50	1
3132423C0000	8	-450	1	''	3	-1B	RF
3132424A0000	8	-400A	1	3132481A002A	1	-120A	1
3132424C0000	8	-400	1	''	1A	-90	1

- Item not illustrated

PART NUMBER	FIG.	ITEM	REQ	PART NUMBER	FIG.	ITEM	REQ
''	6	1	RF	31327960002P	5	-20A	1
3132482A002A	1	-120	1	31327970002P	5	20	1
''	6	-1A	RF	3132803000ZA	5	-160	1
3132485A0000	3	-410	1	3132804000ZA	5	-160A	1
3132486A0000	3	-410A	1	31328050002P	5	170	1
3132487A002A	3	-10	1	31328060002P	5	-170A	1
3132488A002A	3	-10A	1	31328200002P	5	-40	1
3132488C002A	3	-10B	1	313282100000	5	50	1
3132489A00ZA	3	-160	1	31328250002P	5	100	1
3132490A00ZA	3	-160A	1	31328280002P	5	60	1
3132499A0000	8A	430	1	31328290002P	5	-63	1
3132499A0000	8	430	1	31328370002P	5	-580A	1
''	8	460	1	31328380002P	5	580	1
3132501A0000	8	410	1	31328430002P	5	570	1
3132504A00ZA	3	-170A	1	3132843A002P	5	575	1
3132505A00ZA	3	-170	1	3132843C002P	5	-575A	1
3132506A00ZA	3	-210A	1	3132843F002P	5	-575B	1
3132507A00ZA	3	210	1	31328450002P	5	585	4
3132510A0000	3	-180A	1	313284900000	5	-520	2
3132511A0000	3	-180	1	3132850000ZA	1	100	1
3132525A0000	8	470	1	''	5	-1B	RF
3132565A0000	2	50	1	3132851000ZA	1	-100A	1
313257100000	1	-970	2	''	5	-1C	RF
''	1A	-840	1	3132852000ZA	5	-10B	1
313257300000	1	-910	2	3132853000ZA	5	-10C	1
''	1A	-810	1	31328540002P	5	-20B	1
3132578A0000	7	320	1	31328550002P	5	-20C	1
3132594A00ZA	2	60	1	3132858000ZA	1A	70	1
3132595A00ZA	2	-70	1	''	5	-1D	RF
3132597A00ZA	2	30	1	3132859000ZA	5	-10D	1
313260200000	1	-980	2	31328600002P	5	-20D	1
313260300000	1	-950	2	3132889000ZA	1	190	1
''	1A	-850	1	3132890000ZA	1	-180	1
313264900000	3A	1250	1	313289700000	1	220	1
31326500002A	3	1090	1	313289900000	1	240	1
3132792000ZA	1	-90A	1	31329000002P	1	200	1
''	5	-1A	RF	3132904A00ZA	3	-390A	1
3132793000ZA	1	90	1	''	3A	600	1
''	5	1	RF	3132905A00ZA	3	390	1
3132794000ZA	5	-10A	1	''	3A	-600A	1
3132795000ZA	5	-10	1	313292300000	3B	-1130	1

- Item not illustrated

PART NUMBER	FIG.	ITEM	REQ	PART NUMBER	FIG.	ITEM	REQ
''	4	450	1	313408700000	7	155	1
313292400000	4	440	1	313408800000	7	157	1
3132934E0000	2A	30	1	313417200000	8	-420A	1
313293500000	2A	-60	1	313417300000	8	420	1
313293600000	2A	-60A	1	313419300000	8A	420	1
313293700000	2A	-70A	1	313419400000	8A	-400	1
313293800000	2A	70	1	31341950002A	6	30	1
3132939E0000	2A	-20	1	31341960002A	6	-30A	1
3132940E0000	2A	-10	1	3134209000ZA	1	80	1
3132941E0000	2	-80	1	''	4	1	RF
''	2A	1	RF	3134210000ZA	4	-10	1
313295400000	3A	880	1	31342110002A	4	20	1
313295500000	3A	-880A	1	31342120002P	4	-30	1
31330040002A	1	-960	1	31342200002A	4	260	1
''	1A	-860	1	313422200000	1	-940	2
31330050002A	1	-960A	1	''	1A	-820	1
31332720002P	4	490	1	31342300002A	3B	1100	1
3133277000ZA	4	-470	1	313431100000	1	540	4
31332800002A	3	-940	1	''	1A	460	2
31332810002A	3	950	1	3134312000ZA	1	-510	2
31332820002A	3	960	1	''	1A	-430	1
313328500000	3A	-1110	1	3134314000ZA	1	520	2
313328600000	3A	1120	1	''	1A	440	1
313328700000	3A	1130	1	31343160002P	1	570	4
3133290A00ZA	3	-220A	1	''	1A	480	2
''	3A	520	1	313431800000	1	580	2
3133291A00ZA	3	220	1	''	1A	490	1
''	3A	-520A	1	3134640000ZA	4	-280	1
313335800000	5	-65	2	3134641000ZA	4	290	1
''	5	-370	4	3134642000ZA	3B	1180	1
313346500000	3B	980	2	''	4	-300A	1
''	4	90	2	3134643000ZA	4	300	1
3134044000ZA	1	500	1	3134659000ZA	3B	-1160	1
''	8	1	RF	3134660000ZA	3B	1170	1
3134045000ZA	1	-500A	1	313468600000	8A	410	1
''	8	-1A	1	3134694A002A	3B	-70	1
3134046000ZA	1A	420	1	31346950002A	3B	30	1
''	8A	1	RF	3134696000ZA	3B	-20	1
3134084H0000	7	-140	1	31346970002P	3B	-40	1
3134085H0000	7	150	1	31346980002A	3B	-100	1
313408600000	7	165	1	3134699000ZA	3B	-10	1

- Item not illustrated

PART NUMBER	FIG.	ITEM	REQ	PART NUMBER	FIG.	ITEM	REQ
31347010002A	3B	110	1	319728200000	9	70	2
3134702A002A	3B	80	1	3197282A0000	9	130	1
313483700000	8	-1080A	1	319728300000	7	-580	1
313483800000	8	1080	1	3197286N0000	8	-780	2
313484700000	1	-990	1	‘’	8A	-780	1
313484800000	1	-1000	1	319728800000	8	-870	2
313485600000	1	-1090	2	‘’	8A	-870	1
‘’	1A	-990	1	319729100001	8	580	2
‘’	9	-210	1	‘’	8A	580	1
3134875000ZA	5	-660	1	‘’	11	1	RF
313488000000	7	180	2	3197313C00ZA	1	30	2
31348840002A	1	270	1	‘’	1A	30	1
313489700000	8A	-460	1	‘’	2	1	RF
313489800000	8A	-470	1	3197352A0000	1	-790	2
31349140002P	1A	-310	1	‘’	1A	-720	1
31349150002P	1A	-360	1	319735400000	1	-150	2
31349160002P	1A	330	1	‘’	1A	-120	1
‘’	1A	380	1	‘’	7	-830	1
31349190002P	3B	-285	1	3197355A0000	1	-110A	2
3134920000ZA	1A	40	1	‘’	1A	-80	1
‘’	3B	1	RF	‘’	11	-290A	1
31349450002A	5	555	2	3197356A0000	1	-110	2
3134950000ZA	5	670	1	‘’	1A	-80A	1
3153.AA01	3	-110	2	‘’	11	-290	1
319418100000	1	-130	2	31973590002A	1	-330	2
‘’	1A	-100	1	‘’	1A	-200	1
‘’	6	-250	1	3197380G002A	1	-290B	1
3194442A0000	1	-340	1	‘’	1A	-160	1
‘’	1A	-210	1	3197380H002A	1	-290A	1
3197220A0000	3B	-1330	1	3197381G002A	1	-290C	1
‘’	4	-720	2	3197381H002A	1	-290	1
3197220C0000	3	-820	1	‘’	1A	-160A	1
‘’	3A	-990	1	3197393C0000	8	-1000	2
3197221A0000	1	-60	2	‘’	10	-220	1
‘’	1A	-60	1	3197393E0000	8A	-1000	2
‘’	3	-1150	1	‘’	10	-220A	1
‘’	3A	-1310	1	3197394A0000	3A	-870	1
3197222A0000	1	-70	1	3197395A0000	3A	-870A	1
‘’	3	-1190	1	319740100000	8	-940	4
3197222C0000	1	-70A	1	‘’	8A	-940	2
‘’	3A	-1390	1	3197523A00ZA	1	-870	2

- Item not illustrated

PART NUMBER	FIG.	ITEM	REQ
''	1A	-710	1
''	5	-650	1
3197538000ZA	5	-310	1
3197539000ZA	5	-310A	1
319762000000	8	-900	2
''	8A	-900	1
319774300000	8	570	1
''	8A	570	1
''	9	1	RF
319774400000	8	-570A	1
''	9	-1A	RF
319791500000	8	-1005	2
''	8A	-1005	2
''	10	-180	1
3197956A008A	1	-410	1
3197957A008A	1	-410A	1
3198229A0000	1	-55	1
''	3A	-1340	1
319823000000	3A	-1100	1
31982310002A	3	-930	1
319824800000	2	-190	1
''	8	-1140	2
''	8A	-1140	1
319837700000	3A	-1205A	1
319837800000	3A	-1205	1
319837900000	1	-880A	1
319838000000	1	-880	1
319838100000	1A	-790	1
319838200000	1	-670A	1
319838300000	1	-670	1
319838400000	1A	-590	1
319839100000	1A	-60A	1
''	3B	-1440	1
319840700000	1	-1020	1
319840800000	1A	-880	1
319841200000	8A	-450	1
319841700000	11	90	2
35521-3-C	1	530	4
''	1A	450	2
452170MEPLE2	4	530	2
A11001300000	3	-90	8

PART NUMBER	FIG.	ITEM	REQ
''	3	340	5
A11405000000	1A	-240	2
''	1A	-640	4
A11500200000	3	-920	3
''	3B	-1430	6
A12008000000	8	490	4
A21600600000	3	-280	4
''	3A	-580	4
A21600900000	8	-1120	4
''	8A	-1130	2
AFA03-003800	1A	1280	1
AFA03-003900	1	1450	1
AFA18-100000	1	-1440	2
''	1A	-1260	1
AFA18-102601	1	-1460	2
''	1A	-1270	1
AFA35-206109	1	-1490	1
AFA35-206111	1A	-1310	1
AFA35-206113	1	-1480	1
AFP89-004800	1	-1500	2
''	1A	-1300	1
AFS18-200001	1	-1470	1
''	1A	-1290	1
AN3-12A	10	90	1
AN3-4A	8	-700	8
''	8A	-700	4
''	10	340	2
AN3-5A	3A	90	1
''	3B	1290	2
''	4	-700	2
AN4-10A	3A	80	1
AN4-11A	3	560	1
AN4-13A	2	200	4
''	8	-1110	4
''	10	-410	1
AN4-15A	9	100	1
AN4-22A	9	140	1
AN4-4A	11	450	1
AN4-7A	3	1210	1
AN5-11A	10	350	2
AN525-10R6	1	450	1

- Item not illustrated

PART NUMBER	FIG.	ITEM	REQ
AN525-832R8	5	70	2
AN565A1032H9	6	-220	1
AN565A6H2	6	200	1
''	6	270	1
AN565A6H3	3	980	2
''	3	990	2
''	3A	1150	1
AN565A6H5	3A	1160	2
AN565A6H6	6	-60	4
AN960-10	3	80	2
''	3	-780	2
''	3A	110	3
''	3A	290	2
''	3A	860	2
''	3B	1300	2
''	4	710	2
''	5	630	4
''	7	490	1
''	7	710	2
''	9	120	4
''	10	100	1
''	10	370	2
AN960-10L	1	-390	3
''	1	-770	16
''	1A	-250	3
''	1A	-650	8
''	2A	90	8
AN960-4	1	-400	1
''	1A	-260	1
''	4	-410	2
AN960-416	2	210	8
''	3A	1420	1
''	8	980	8
''	8A	980	4
''	9	110	3
''	10	360	1
AN960-416L	3	570	1
''	3	1220	1
''	3A	100	1
''	7	560	1
''	8	-710	4

PART NUMBER	FIG.	ITEM	REQ
''	8A	-720	2
AN960-6	1	650	8
''	1A	570	4
''	2A	-77	8
''	3B	-840	2
''	3B	1000	4
''	4	130	4
''	4	-420	2
''	4A	-490	2
AN960-D10L	1	-780	16
''	1A	-660	8
AN960-PD4L	3B	230	2
AN960XC10	5	490	4
AN960XC6	5	470	6
B00336700000	1	-1010	0
''	1A	-870	0
B00389100000	1	-1290	1
B00389200000	1A	-1120	1
B00389300000	1	-1360	1
B00389400000	1A	-1190	1
B00389500000	1	-1430	1
B00389600000	1A	-1250	1
B0A751500000	7	270	2
B10002800000	8	-760	8
''	8A	-760	4
B10003000000	1	-480	8
''	1A	-300	8
''	7	230	16
B10008300000	3B	-1080	2
''	4	-464	4
B10008400000	11	270	2
''	11	490	2
B10008500000	3B	1450	2
''	8	60	4
''	8	730	16
''	8A	60	2
''	8A	730	8
B10008600000	3	870	1
''	3	1160	2
''	3A	1040	1
''	3A	1320	2

- Item not illustrated

PART NUMBER	FIG.	ITEM	REQ	PART NUMBER	FIG.	ITEM	REQ
''	3B	1380	1	B1A015400000	7	60	6
''	3B	1460	2	B20012200000	6	210	2
''	4	770	2	B20013300000	1	-850	2
''	8	890	4	''	1A	-780	1
''	8	990	16	BE61-0512	8	270	8
''	8A	890	2	''	8	-740	4
''	8A	990	8	''	8A	270	4
''	10	380	1	BE61-0516	8	-1070	22
''	11	-280	2	''	8A	-1070	11
B10009700000	2	-140	44	DIN1481 2x10	2	-180	2
B10012300000	8	-390	4	DIN2093	7	770	4
''	8A	-1110	2	DIN6799 D2.3	3	800	2
B10014200000	3	1170	2	''	3A	940	2
''	3A	1330	2	''	3B	920	1
B10014400000	11	230	8	''	4	200	1
B10015400000	11	160	6	''	4	540	4
''	11	220	4	DIN6799 D=4	3B	-780	2
B10042200000	3B	1470	1	''	4A	-460	2
B10050100000	8	850	12	DIN6799 D=6	3B	-670	4
''	8A	850	6	''	4A	-450	4
B10053400000	8	-495	6	DM00133-1	8	520	4
B10053500000	1	-810	80	''	8A	520	2
''	1A	-740	40	DM02217-1	10	150	1
B10055200000	7	460	2	DM02337-1	3B	-150	1
''	8	740A	4	F108191E0000	8	600	4
''	8A	740	2	''	8A	600	2
B10055400000	10	190	1	F10899700000	6	70	2
B10058300000	5	790	1	F110102A0000	11	380	1
B10084700000	3B	-160	1	F11025000000	10	30	1
''	4	-430	2	F110619A0000	6	-170	1
''	4	650	2	F111427A0000	10	50	1
B10085400000	10	210	1	F112549C0000	8	-950	4
B10085500000	1	-830	36	''	8A	-950	2
''	1A	-760	18	F11421500000	6	50	4
B10085700000	1	-840	16	F114334A0000	3B	470	1
''	1A	-770	8	''	4A	90	1
B10087700000	10	40	1	F11433500000	6	230	1
B1A000300000	7	80	4	F11433600000	6	-230A	1
B1A003100000	7	-90	22	F11433700000	6	260	1
B1A009800000	7	-130	6	F114337A0000	6	190	1
B1A011000000	7	70	6	F11433800000	6	-80A	1

- Item not illustrated

PART NUMBER	FIG.	ITEM	REQ	PART NUMBER	FIG.	ITEM	REQ
F11433900000	6	80	1	F116337A0000	11	310	1
F11437100000	10	60	1	F116340A0000	11	320	1
F11498900000	1	-350	1	F11634100000	11	370	1
''	1A	-220	1	F116342E0000	11	330	1
F115417A0000	10	140	1	F116343A0000	11	340	1
F11557700000	8	660	4	F11635200000	11	360	1
''	8A	660	2	F11635300000	11	390	1
F11579000000	8	220	8	F11641900000	3	-580	1
''	8A	220	4	''	3B	-350	3
F11580500000	7	570	1	F11648400000	11	180	1
F11580700000	7	650	1	F11648500000	11	40	1
F115814A0000	7	690	1	F116487A0000	11	190	1
F11581500000	7	670	1	F116493A0000	9	60	1
F11581600000	7	500	2	F11650700000	7	600	1
F115889A0000	7	730	2	F11650800000	7	-590	1
F11589000000	7	450	2	F11651100000	10	70	1
F115891A0000	7	-190	4	F11651200000	10	120	1
F115919A0000	11	70	2	F11651300000	8	-970	8
F116221A0000	3	480	1	''	8A	-970	4
F116232A0000	3	850	1	''	10	250	1
''	3A	1030	1	F11651500000	8	820	4
F11623300000	3	830	1	''	8A	820	2
''	3A	1020	1	F116520A0000	8	590	6
''	3B	1350	1	''	8A	590	3
''	4	740	2	F11652600000	8	830	4
F11623400000	3B	1370	2	''	8A	830	2
''	4	760	4	F11653200001	8	630	4
F11624000000	3B	1360	1	''	8A	630	2
''	4	750	2	''	11	-240	2
F116240A0000	3	840	1	F11653400000	8	330	8
''	3A	1000	1	''	8A	330	4
F116244A0000	3	1200	1	F11653500001	8	-140	2
''	3A	1400	1	''	8	640	4
F11625300000	3	510	2	''	8A	-140	1
F11628000000	3	530	8	''	8A	640	2
''	3A	230	4	F116536A0000	11	100	1
''	3B	-360	6	F116537A0001	8	200	2
F116280A0000	3A	260	2	''	8A	200	1
F116316A0000	3A	390	1	F116538A0001	8	210	2
F116317A0000	3A	-390A	1	''	8A	210	1
F11633600000	11	350	1	F116545A0000	8	650	2

- Item not illustrated

PART NUMBER	FIG.	ITEM	REQ
''	8A	650	1
F116549A0000	8	110	2
''	8A	110	1
F116550A0000	8	120	2
''	8A	120	1
F11656400000	7	470	1
F11656500000	7	-530A	1
F11656600000	7	530	1
F11659400000	8	670	8
''	8A	670	4
F11660400000	11	140	1
F11660500000	11	150	2
F11660600001	8	130	2
''	8A	130	1
F11662700000	3	460	2
F11665600000	3A	120	1
F11665700000	3	-60	4
F11665800000	3	470	1
F116658A0000	3B	-390	3
''	3B	640	1
''	4A	320	1
F11666700000	7	850	1
F11666800000	7	840	2
F11667000000	9	50	1
F11667100000	9	30	1
F11667200000	9	40	1
F11667400001	2	160	2
F11667700000	7	-740	2
F116682A0000	3A	180	1
F116683A0000	3A	-180A	1
F11669100000	3A	400	1
F11678600000	8	250	2
''	8A	250	1
F11678700000	8	260	4
''	8A	260	2
F11678800000	8	320	2
''	8A	320	1
F11679700000	10	260	1
F11679800000	10	240	1
F11683100000	3A	930	2
F11683200000	3A	-920	1

PART NUMBER	FIG.	ITEM	REQ
F11683500000	3A	890	1
F11683600000	3A	-890A	1
F11683700000	3A	900	1
F11683800000	3A	-900A	1
F11683900000	3A	910	1
F11684000000	3A	-910A	1
F11684300000	8	-960	4
''	8A	-960	2
''	10	330	1
F116856C0000	7	120	1
F11687000001	3	610	1
''	3	650	1
''	3	690	1
''	3	730	1
''	3A	680	1
''	3A	720	1
''	3A	760	1
''	3A	800	1
''	3B	880	1
''	4	160	1
F11687100000	3	790	2
''	3A	950	2
F11687200000	3B	910	1
''	4	190	1
F11687300000	10	280	2
F11687400000	10	270	1
F11708300000	5	-590	2
F11708600000	5	540	2
F11729400000	3A	480	3
F11730400000	8	-910	4
''	8A	-910	2
F11733800000	3B	700	1
''	4A	350	1
F11735500000	8	1090	4
''	8A	1090	2
F11736800000	4	500	2
F11737500000	3B	320	1
F11737600000	3B	330	1
F11747600000	10	290	1
F11747700000	10	300	1
F11747900000	3B	940	1

- Item not illustrated

PART NUMBER	FIG.	ITEM	REQ	PART NUMBER	FIG.	ITEM	REQ
''	4	230	1	''	8A	815	1
F117486C0000	3B	750	1	F118462A0000	8	810	2
''	4A	170	1	''	8A	810	1
F117497A0000	3B	660	1	F11846300000	8	800	4
''	4A	280	1	''	8A	800	2
F11750100001	4	520	2	F11858800000	3B	1110	1
F11751100000	4	-510	2	''	4	580	2
F11751900000	3B	-490	1	F11863600000	5	510	1
''	4A	-130	1	F11868100000	1	600	4
F11759800000	3A	-960	1	''	1A	510	2
F117726A0000	8	610	1	F11868200000	1	590	4
F117727A0000	8	-610A	1	''	1A	500	2
F117728A0000	8	620	1	F11868800000	1	660	4
F117729A0000	8	-620A	1	''	1A	580	2
F117730A0000	8A	610	1	F20502400000	3A	320	2
F117731A0000	8A	620	1	F20504400000	9	150	2
F11775400000	8	-1030	1	F20535400000	3	540	2
F11775500000	8	-1030A	1	F206473C0000	6	150	4
F11775600000	8	-1040	1	F20651900000	5	-640	4
F11775700000	8	-1040A	1	''	9	170	1
F11788100000	5	-720	2	F20671100000	6	130	2
F11790100000	3	-810	1	F206712A0000	6	120	1
F11795000000	10	-400	2	F20746400000	3A	240	2
F11820700000	11	470	1	F208040C0000	7	750	1
F11820800000	11	480	1	F20815600000	7	640	2
F11821600000	3	1020	1	F208169A0000	11	50	2
F11821800000	3A	1180	1	F20826100000	7	510	2
F11821900000	3A	1140	1	F20829500000	11	410	2
F11822100000	3	1000	2	F20840100000	3B	-140	1
F11822200000	3	970	1	''	4	-270	1
F11822300000	3	1030	1	F20843700000	8	150	2
F11822700000	3A	1190	1	''	8A	150	1
F11824000000	3A	-1200	2	F20843800000	8	160	2
F11824800000	1	-380	1	''	8A	160	1
''	1A	-230	1	F20843900000	8	-165	2
F11825200000	3A	220	1	''	8A	-165	1
F11825300000	3A	280	1	F20844900000	3	860	2
F11825400000	3A	190	1	''	3A	1010	2
F11825500000	3A	200	1	F208472C0000	3A	830	1
F11825600000	3A	250	1	F208473C0000	3A	-830A	1
F11846200000	8	815	2	F20851800000	11	210	2

- Item not illustrated

PART NUMBER	FIG.	ITEM	REQ
F20851900000	8	680	8
''	8A	580	4
''	11	-260	2
F208523A0000	11	60	1
F208548G0000	7	30	1
F20855000000	7	170	1
F2086960002A	2	120	1
F20869800000	2	110	1
F20870200000	3	490	1
F20871100000	3	520	4
''	3A	270	2
F20872100000	3	500	1
F20891100000	3B	-370	3
F20891200000	3B	-380	6
F20892200000	3B	710	2
''	4A	340	2
F20892300000	3B	690	4
''	4A	190	4
F208934C0000	8	385	2
''	8A	-360	1
F208934E0000	8	387	2
''	8A	-365	1
F20910300000	3B	650	1
''	4A	220	1
F20910400000	3B	730	2
''	4A	310	2
F20910500000	3B	480	2
''	4A	110	2
F20951900000	3B	620	1
''	4A	420	1
F20952000000	3B	830	2
''	4A	240	2
F20952100000	3B	820	2
''	4A	210	2
F20964000000	5	-360	2
F2096830002A	5	-320A	1
F2096840002A	5	320	1
F20983300000	3	1010	2
F21022100000	5	-130	2
F21023800000	6	160	4
F210390000**	9	-230	1

PART NUMBER	FIG.	ITEM	REQ
F21039000000	1	-1270	2
''	1A	-1100	1
F210438000ZA	1	-280	1
F21045600000	2A	73	4
F22NKM-82	8	-930	4
''	8A	-930	2
F42NKE-048	2	220	4
GFM-1012-09	3A	-970	8
GFM-1820-11	3A	-980	44
H2056720002A	3B	1090	1
''	4	465	2
H2056730002A	3B	1060	1
''	4	462	2
H20584300021	3	620	1
''	3	660	1
''	3	700	1
''	3	740	1
''	3A	690	1
''	3A	730	1
''	3A	770	1
''	3A	810	1
''	3B	890	1
''	4	170	1
H6610011A076	1	-1210	2
''	1A	-1020	1
H6610052F102	1	-1220	2
''	1A	-1060	1
H6610053B102	1	-1230	2
''	1A	-1070	1
H6610054C163	1	-1240	2
''	1A	-1080	1
H6610055K076	1	-1140	2
''	1A	-1090	1
H6610056L030	1	-1130	2
''	1A	-930	1
K10605700000	7	760	2
K10632900000	10	20	1
K11061600000	5	710	1
K11097400000	3B	1070	1
''	4	463	2
K11235000000	7	40	6

- Item not illustrated

PART NUMBER	FIG.	ITEM	REQ	PART NUMBER	FIG.	ITEM	REQ
K112352A0000	7	50	2	K11451500000	11	460	1
K11248800000	1	-700	2	K114561H0000	7	200	1
‘’	1A	-610	1	K11463700000	3A	-1207A	1
K11294500000	3B	-1120	1	K11463800000	3A	1207	1
‘’	4	610	1	K11475200000	3A	1350	1
K11294600000	4	600	1	K206278E002A	6	110	2
K11294800000	3	-380A	1	K2078150002A	5	680	1
‘’	3A	610	1	K207933A002A	5	-340	2
K11294900000	3	380	1	K2086530002A	5	690	1
‘’	3A	-610A	1	K2088460002A	1	-300C	1
K11298600000	4	-210A	1	K2088470002A	1	300B	1
K11298700000	4	210	1	‘’	1A	170	1
K11320500000	5	300	2	K2091680002A	3B	270	1
K11320700000	10	310	1	K20917000000	3	1130	1
K11320900000	7	110	2	‘’	3A	1280	1
K113211A0000	10	320	2	K2091940002A	3	-40A	1
K11322000000	8	-1010	2	K209194A002A	3	-40B	1
‘’	8A	-1010	1	K2091950002A	3	40	1
K11322100000	8	-1020	2	K2091980002A	3	-190A	1
‘’	8A	-1020	1	K2091990002A	3	190	1
K113348E0000	5	180	2	K2092080002A	3A	510	1
K113349A0000	5	530	2	K2092090002A	3A	-510A	1
K11349700000	3B	-1140	1	K2092710002A	4	590	1
‘’	4	570	2	K2092760002A	3B	1150	1
K11357300000	5	-560	2	K2092770002A	3B	130	1
K11361600000	1	550	2	K2092790002A	3B	280	1
‘’	1A	470	1	K50534600000	7	-240	1
K11376700000	10	230	1	K505348A00QQ	3	-630	1
K11391400000	1	-460	1	‘’	3A	-700	1
‘’	1A	-280	1	K505349A00QQ	3	-670	1
K114272C0000	5	-700	1	‘’	3A	-740	1
K11436500000	3B	810	2	K505350A00QQ	3	-710	1
‘’	4A	250	2	‘’	3A	-780	1
K11439100000	3B	790	2	‘’	3B	-900	1
‘’	4A	290	2	‘’	4	-180	1
K11440900000	8	480	1	K505351A00QQ	3	-750	1
K11441800000	8	1050	1	‘’	3A	-820	1
K11442700000	1	-470	1	K505370A00ZA	3B	-960	1
‘’	1A	-290	1	‘’	4	-250	1
K11448800000	2A	71	2	K505406000**	9	-240	1
K11451400000	11	-460A	1	K50540600000	1	-1280	2

- Item not illustrated

PART NUMBER	FIG.	ITEM	REQ
''	1A	-1110	1
K50540700000	1A	320	1
K505407A0000	1A	370	1
KR22PP	11	80	1
MC78-30	1	-1170	2
''	1A	-980	1
MC89-30	1	-1190	2
''	1A	-970	1
MC89-54	1	-1180	6
''	1A	-960	3
MC92-54	1	-1200	2
''	1A	-950	1
MNB2771-0613	10	390	2
MS20426B3-4	3	-400	3
''	3A	-620	3
MS21044-N3	7	-800	1
MS21083N06	3B	1010	4
''	4	120	4
''	4	-370	4
''	7	870	2
''	8A	-490	4
MS21083NO8	7	620	3
''	7	790	2
MS21209C0610	3A	-1090	3
''	4	-820	12
MS21919WDG15	1	-820	2
''	1A	-750	1
MS24693A4	1A	340	4
''	1A	390	4
MS24693C2	3	187	2
''	3A	450	2
MS24693C23	1	560	16
''	1A	520	8
''	3B	90	5
''	3B	120	4
''	3B	210	2
MS24693C24	3A	410	2
''	3B	170	1
''	3B	-400	8
''	3B	990	4
''	3B	1210	6

PART NUMBER	FIG.	ITEM	REQ
''	4	100	4
''	4	-320	4
''	4	620	6
''	5	-600	4
''	11	440	2
MS24693C25	3	-910	3
''	3A	330	2
''	3A	-1080	3
''	3B	-860	2
''	3B	-1420	6
''	4	-810	12
''	4A	-480	2
''	5	550	4
MS24693C26	1A	350	4
''	1A	400	4
''	1A	530	2
''	3	188	8
''	3	360	2
''	3A	460	8
''	3A	640	2
''	3B	60	12
''	3B	190	1
''	3B	630	2
''	3B	1020	8
''	4	50	12
''	4	240	8
''	4	-350	4
''	4A	430	2
MS24693C269	3A	1360	4
MS24693C27	3	240	2
''	3	760	4
''	3A	540	2
''	3A	840	4
MS24693C271	6	180	3
MS24693C273	6	240	4
''	7	300	4
''	10	-420	2
MS24693C274	11	120	3
MS24693C275	8	350	8
''	8A	350	4
MS24693C27O	3A	-130	4

- Item not illustrated

PART NUMBER	FIG.	ITEM	REQ	PART NUMBER	FIG.	ITEM	REQ
''	3A	1370	2	''	5	-195	6
''	4	565	3	''	10	80	1
''	7	540	1	MS24693C48	3B	-410	6
''	11	430	2	''	5	-150	2
MS24693C28	1	210	4	''	7	-820	8
''	1	610	4	''	8A	445	3
''	3	330	1	MS24693C49	3	1040	2
''	3B	1030	1	''	3B	-1400	3
''	3B	1220	6	''	4	790	6
''	4	220	1	MS24693C50	1	230	4
''	4	-360	1	''	3	-590	2
''	4	560	4	''	3B	-420	6
''	4	-630	6	''	3B	500	2
''	5	120	6	''	4A	140	2
''	5	-500	2	''	7	210	4
MS24693C29	1	170	4	''	7	280	8
''	1A	140	4	MS24693C51	7	610	3
MS24693C296	8	340	4	MS24693C52T	4	-330	1
''	8A	340	2	MS24693C54	3B	510	2
''	11	250	2	''	4A	100	2
MS24693C298	8	170	4	MS24693S2	5	-740	2
''	8A	170	2	MS24693S26	4	-310	4
MS24693C3	3A	650	1	MS24693S269	3A	1170	2
''	3A	1209	3	''	7	440	4
MS24693C30	1	640	4	MS24693S272	1	440	3
''	1A	535	2	''	2A	50	8
''	3B	1230	3	''	3	880	1
''	4	-670	6	''	3A	1060	1
MS24693C300	7	550	1	''	3B	1410	1
MS24693C31	3B	200	2	''	4	800	2
''	3B	1240	2	''	8	840	4
''	4	660	4	''	8A	860	2
MS24693C32	7	860	2	MS24693S277	7	630	1
MS24693C4	3B	590	2	MS24693S28	1	310	3
''	4A	390	2	''	1A	180	3
MS24693C46	3	189	3	''	7	-390	14
''	3	890	3	MS24693S51	11	110	3
''	3A	470	3	MS24693S7	4	-340	2
''	3A	1070	3	MS24694S78	7	700	2
MS24693C47	3	550	6	MS27980-7B	5	-140	2
''	3A	300	4	MS35335-30	3B	1200	4

- Item not illustrated

PART NUMBER	FIG.	ITEM	REQ
MS35335-31	1	260	4
‘’	3	150	5
MS35335-32	8	370	24
‘’	8A	-380	12
MS35338-43	1	-370	2
‘’	1	-730	8
MS35650-302	1	-360	2
‘’	1	-710	4
‘’	1A	-270	2
‘’	1A	-670	2
MS35650-305T	1	-720	8
‘’	1A	-680	4
MS51862-3	3	-270	1
‘’	3A	-570	1
MS51957-26	3	320	1
MS51958-64	3B	1250	2
‘’	4	-640	2
NAS1096-2-12	3B	1310	3
‘’	4	718	6
NAS1096-3-20	1	-740	2
‘’	1A	-620	1
NAS1169-C6L	3	-100	8
‘’	3	350	4
‘’	3B	180	1
‘’	3B	1040	5
‘’	4	110	5
‘’	4	-400	1
NAS1169-C8L	4	-390	1
‘’	4	567	3
NAS1801-3-16	1	-750	2
‘’	1A	-630	1
NAS1801-4-12	10	170	1
NAS391B6P	1	320	3
‘’	1A	190	3
‘’	3	250	2
‘’	3A	550	2
‘’	7	-380	4
NAS428-3A7	3	70	2
‘’	3	-770	2
‘’	3A	60	2
‘’	3A	850	2
NAS428K3-6	3A	310	2
NAS517-4-15	3B	760	1
‘’	4A	200	1
‘’	9	190	1
NAS600-3P	5	730	2
NAS600-4P	3B	220	2
NAS600-6P	3B	1270	6
‘’	4	-680	6
NAS601-10B	5	460	2
NAS601-10P	2	170	2
NAS601-15P	3B	-770	4
‘’	4A	-470	4
NAS601-4P	3B	1260	2
‘’	5	-610	4
‘’	8A	-480	4
NAS601-5P	2	130	6
‘’	3	310	4
‘’	3A	420	4
‘’	3A	660	4
‘’	3B	850	2
‘’	3B	1190	4
‘’	4A	270	2
‘’	7	-220	3
NAS601-6B	5	450	4
NAS601-6P	1	630	4
‘’	1A	550	2
‘’	3	260	1
‘’	3	-1120	4
‘’	3A	560	2
‘’	3A	1290	4
NAS601-8P	4	-380	2
NAS602-10P	3B	1280	6
‘’	4	690	6
NAS602-12P	3B	1320	2
‘’	4	715	4
NAS602-4P	3	230	2
‘’	3A	530	2
NAS602-6P	1	250	4
‘’	3	140	5
‘’	3B	520	1
‘’	4A	80	1

- Item not illustrated

PART NUMBER	FIG.	ITEM	REQ	PART NUMBER	FIG.	ITEM	REQ
NAS602-7P	8	440	5	''	8	690	4
''	8A	440	2	''	8A	180	2
NAS602-8P	3	900	2	''	8A	690	2
''	3A	1050	2	''	9	80	2
''	3B	1390	2	PS5-10028-50	1	-1250	1
''	4	780	4	PS5-10801-00	1	-1040	2
''	8	-920	8	''	1A	-1010	1
''	8A	-920	4	PS5-21530-01	1	-1260	6
NAS603-10B	5	480	2	''	1A	-1050	3
NAS603-10P	4	550	2	''	3	1180	1
''	7	-780	2	''	3A	1380	1
NAS603-12P	7	520	5	PS5-22530-00	9	220	1
NAS603-13P	3A	70	5	PS5-22530-01	1	-1080	2
NAS603-14P	5	110	2	''	1A	-1000	1
''	8	360	12	''	9	200	1
''	8A	370	6	PS6-10000-00	1	1050	1
''	9	160	8	''	1A	1030	1
NAS603-4P	3	1230	1	PS6-55000-04	1	-1120	2
''	3A	1410	1	''	1A	-910	1
NAS603-5P	5	190	8	PS6-63001-07	1	-1060	1
NAS603-6P	3A	-50	2	''	1A	-1040	1
''	5	620	4	PS6-63001127	1	-1070	1
''	7	100	6	PS6-66006050	1	-1100	2
''	8	-1100	4	''	1A	-940	1
''	8A	-1120	2	PS6-70000-54	1	-1030	1
NAS603-8P	2A	75	8	PS6-7000055I	1A	-890	1
''	2A	80	8	PS6-80021-00	1	-1110	1
''	5	780	2	PS6-80037-00	1A	920	1
NAS679A04	3	-1110	7	PS6-85013-00	1	1150	1
''	3A	-1270	5	PS6-85013-01	1	1160	1
NAS679A3	1	-760	4	PS6-85013-02	1A	900	1
''	1A	-690	2	RD-AM6093-17	1	-1340	2
''	2A	79	8	''	1A	-1170	1
''	2A	100	8	RD-AM6093-18	1	-1350	2
''	7	480	1	''	1A	-1180	1
''	7	720	2	RD-AM6957-7	1A	-1160	1
''	8	380	12	RD-AM6967-C1	1	-1330	1
''	8A	-390	6	RD-AX4406	1	1300	1
''	9	90	4	''	1A	1130	1
NAS679A4	7	810	1	RD-AX6421-18	1	1310	2
''	8	180	4	''	1A	1140	1

- Item not illustrated

PART NUMBER	FIG.	ITEM	REQ		PART NUMBER	FIG.	ITEM	REQ
RD-AX6509-E5	1	1320	2					
''	1A	-1150	1					
TM3S10-C	1	-800	120					
''	1A	-730	60					
''	8	-445	6					
UNI6592-69	10	200	2					
UNI6604-69	8	-860	8					
''	8	880	4					
''	8A	-865	4					
''	8A	880	2					

- Item not illustrated

THIS PAGE INTENTIONALLY LEFT BLANK